US 20240068990A1

(19) **United States**

(12) **Patent Application Publication** (10) **Pub. No.: US 2024/0068990 A1**

Chijioke et al. (43) **Pub. Date: Feb. 29, 2024**

(54) **SOUND PRESSURE METROLOGY INSTRUMENT AND DETERMINING SOUND PRESSURE FROM INDEX OF REFRACTION**

(71) Applicant: **Government of the United States of America, as represented by the Secretary of Commerce**, Gaithersburg, MD (US)

(72) Inventors: **Akobuije Douglas Eziani Chijioke**, Silver Spring, MD (US); **Richard Albert Allen**, Clarksburg, MD (US); **Benjamin James Reschovsky**, Cabin John, MD (US); **Randall Paul Wagner**, Arlington, VA (US)

(21) Appl. No.: **18/239,327**

(22) Filed: **Aug. 29, 2023**

Related U.S. Application Data

(60) Provisional application No. 63/401,735, filed on Aug. 29, 2022.

Publication Classification

(51) **Int. Cl.**
G01N 29/11 (2006.01)
G01N 29/24 (2006.01)

(52) **U.S. Cl.**
CPC ***G01N 29/11*** (2013.01); ***G01N 29/2418*** (2013.01); *G01N 2291/015* (2013.01)

(57) **ABSTRACT**

A sound pressure metrology instrument determines sound pressure from index of refraction and includes: a light source that produces source light; the optical cavity that: receives an acoustic field from the sound source; receives the source light from the light source; produces acoustic-modified light from the source light; and communicates the acoustic-modified light to the photodetector; the photodetector that receives the acoustic-modified light from the optical cavity, produces an acoustic-modified signal from the acoustic-modified light, and communicates the acoustic-modified signal to the analyzer module; the analyzer module in electrical communication with the photodetector and that receives the acoustic-modified signal from the photodetector and determines the sound pressure of the acoustic field produced by the sound source from the modulations in the index of refraction of the acoustic medium inside the optical cavity encoded in the acoustic-modified light. %

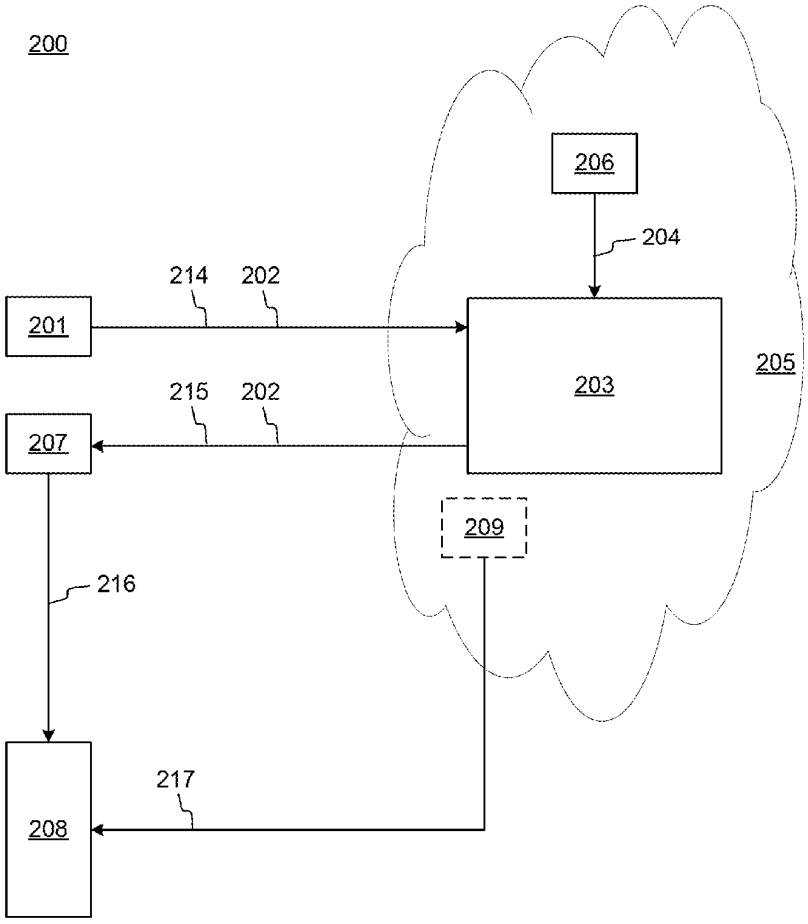

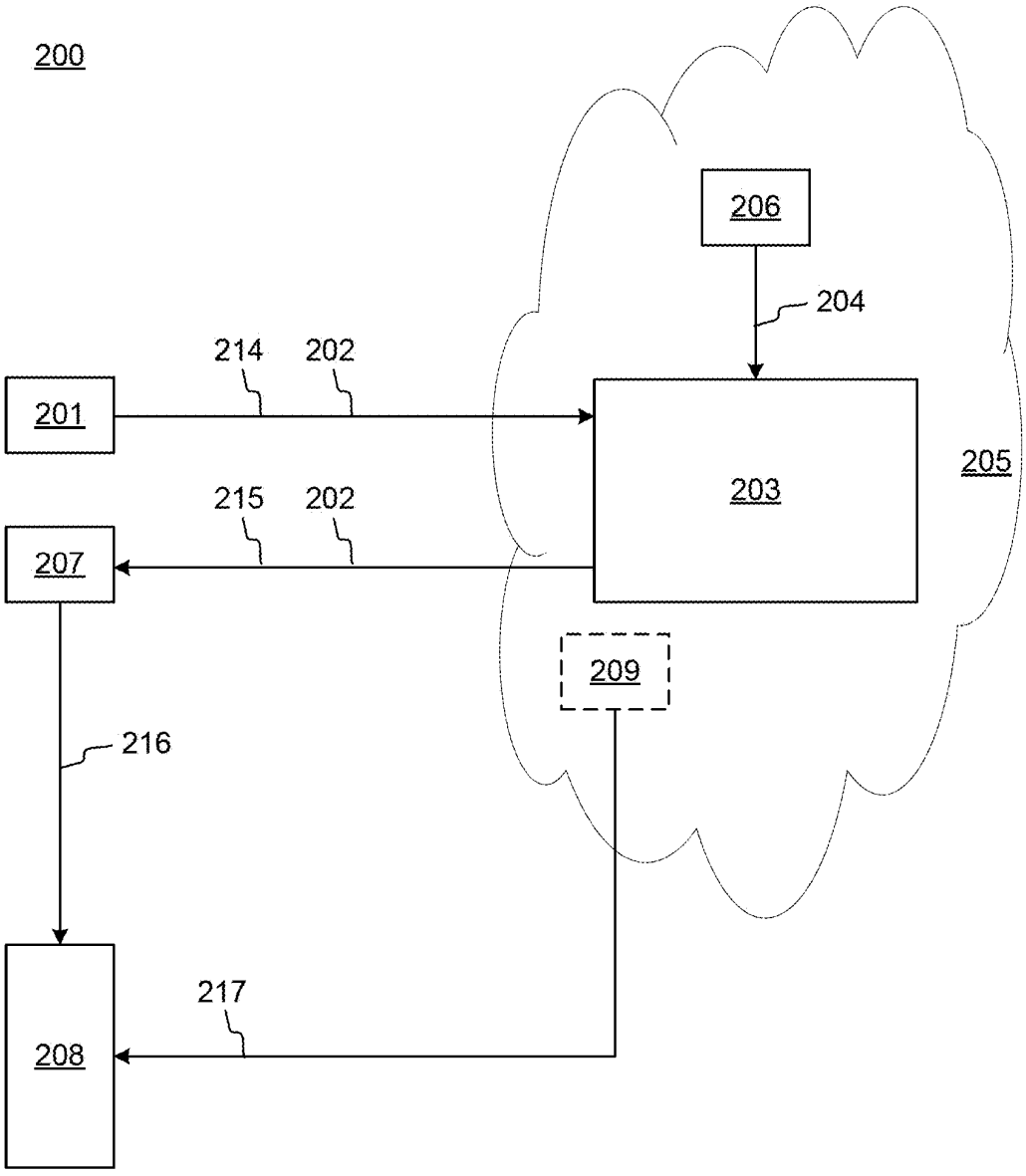

FIG. 1

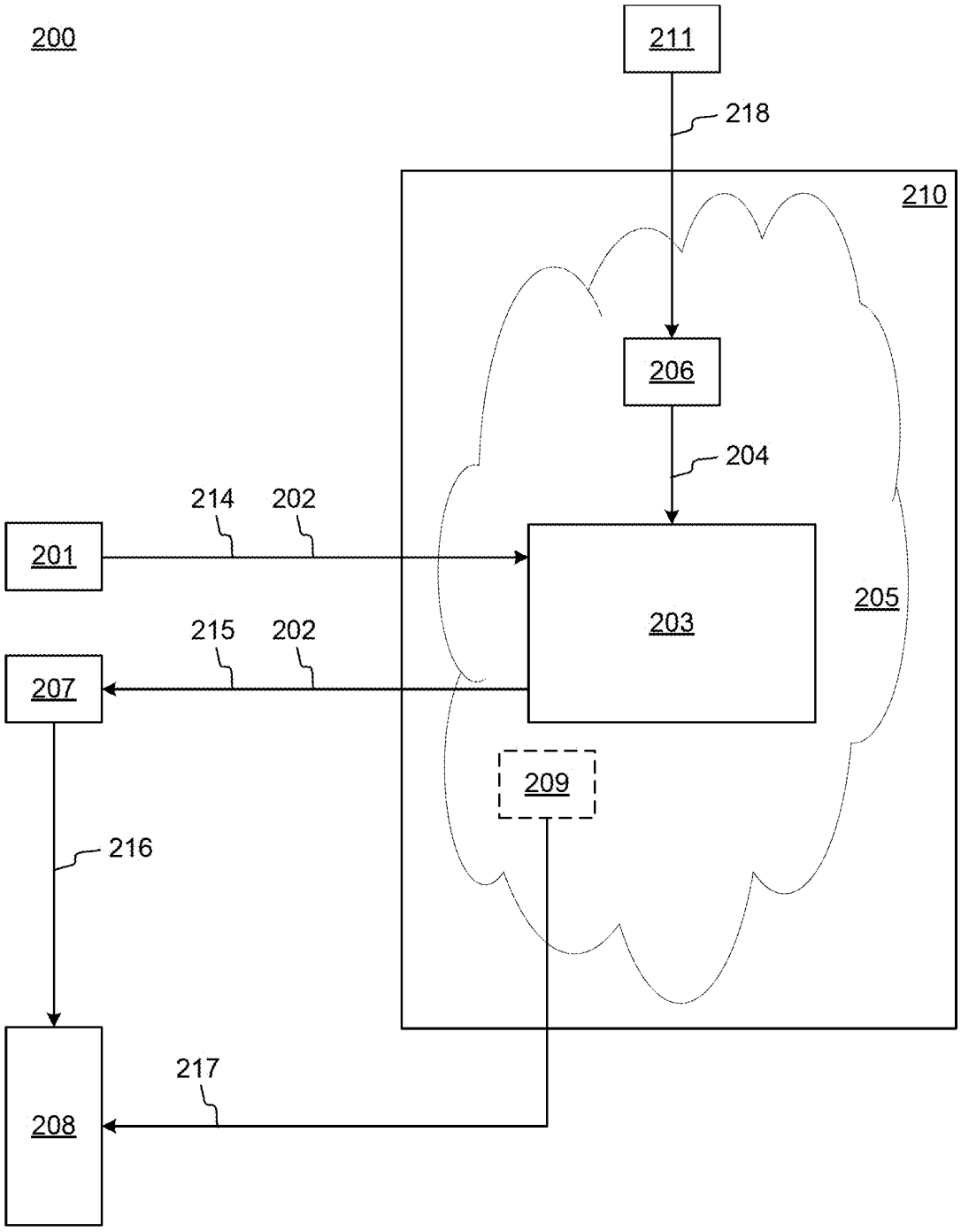
200
211
218
210
206
204
214
202
201
203
205
215
202
207
209
216
208
217

FIG. 2

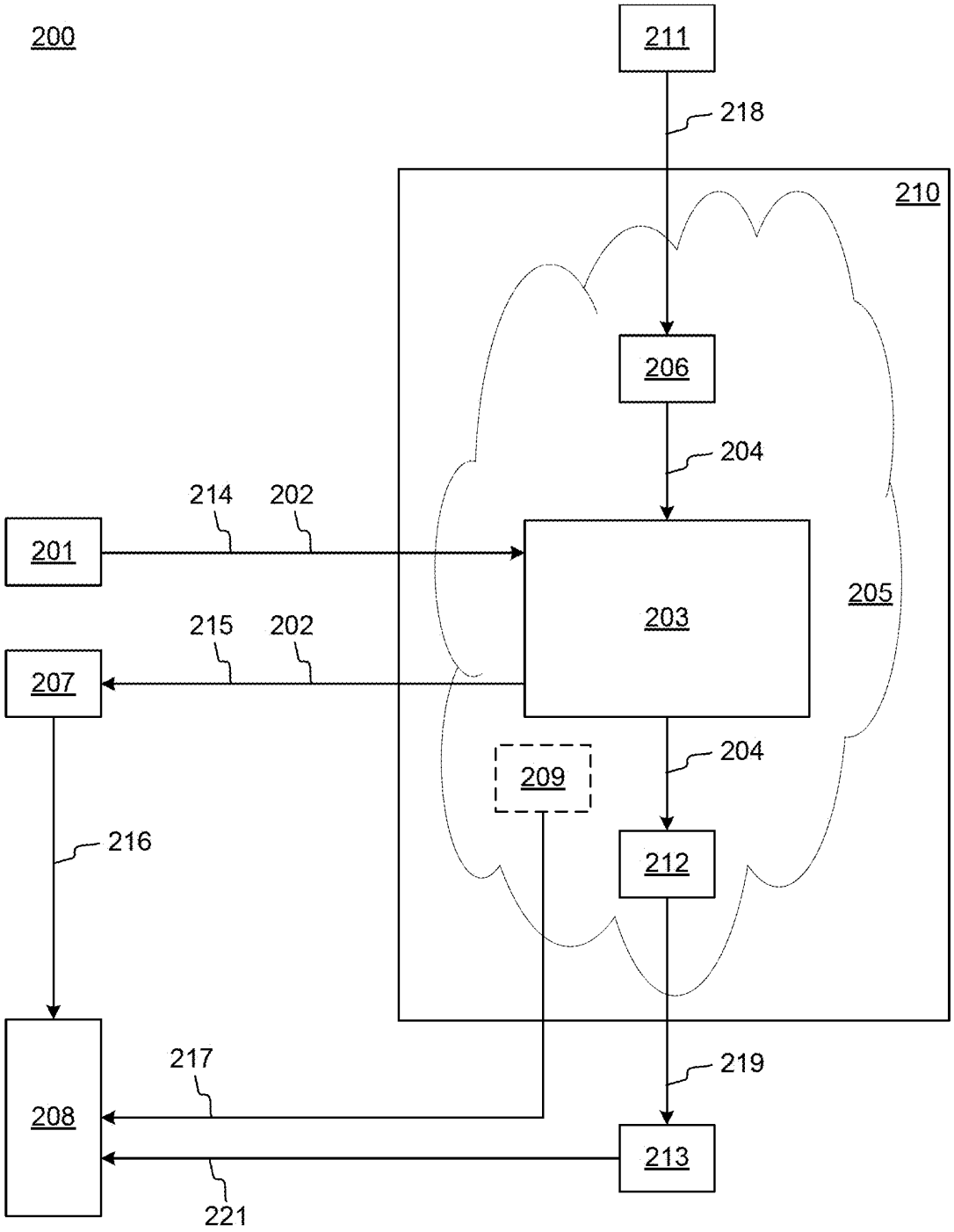
200
211
218
210
206
204
214
202
201
203
205
215
202
207
209
204
216
212
217
219
208
213
221

FIG. 3

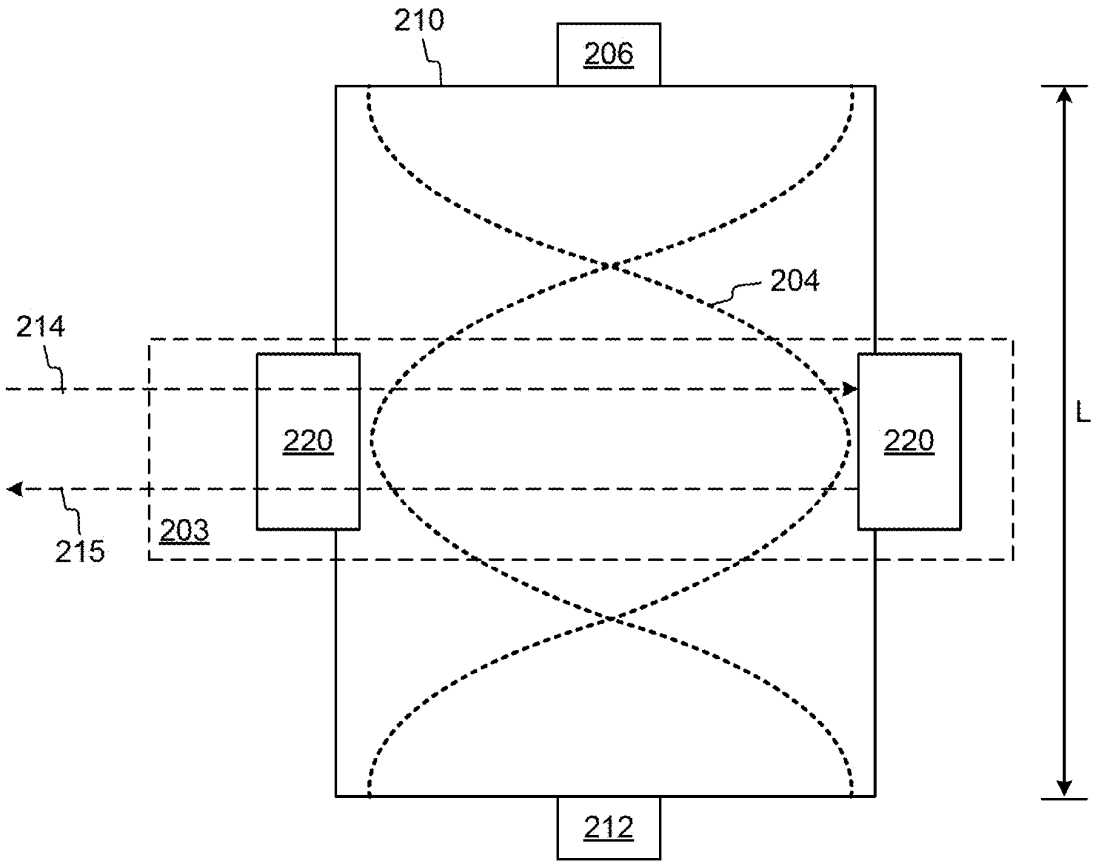

Fixed-length acoustic resonator: supports standing acoustic waves at acoustic wavelengths $\lambda_{ac} = L/N$ where N is an integer.

FIG. 4

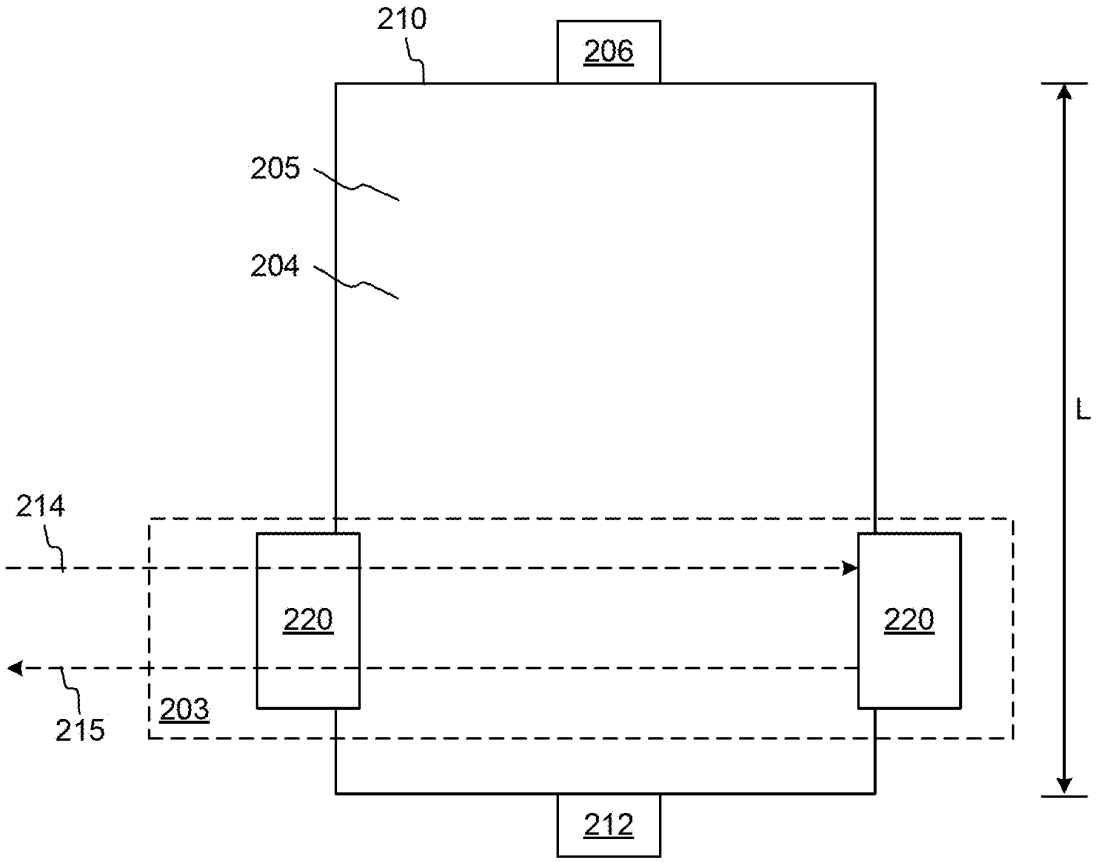

Acoustic coupler: Uniform acoustic field with $L << \lambda_{ac}$

FIG. 5

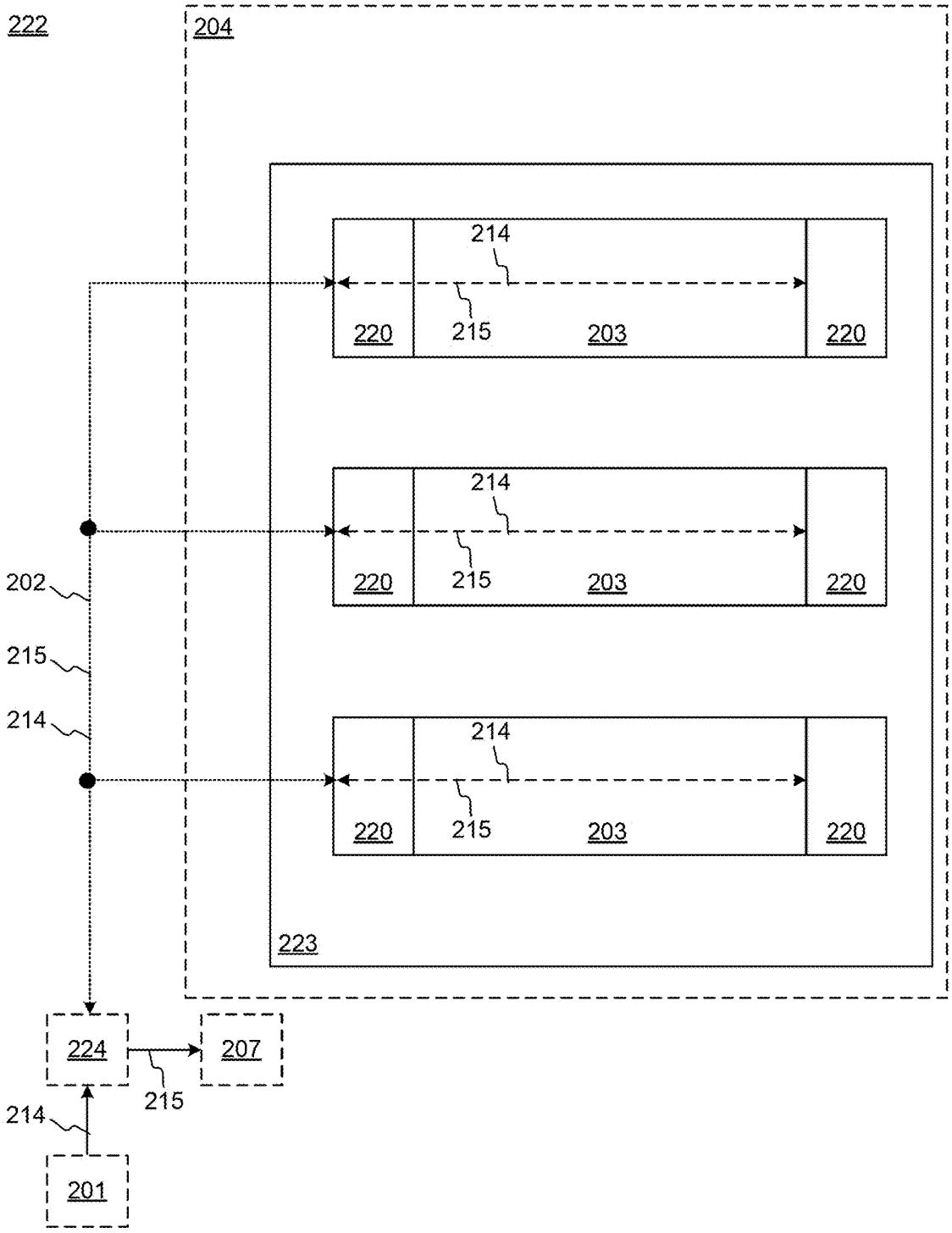
222
204
214
220
215
203
220
214
220
215
203
220
202
215
214
214
220
215
203
220
223
224
207
215
214
201

FIG. 6

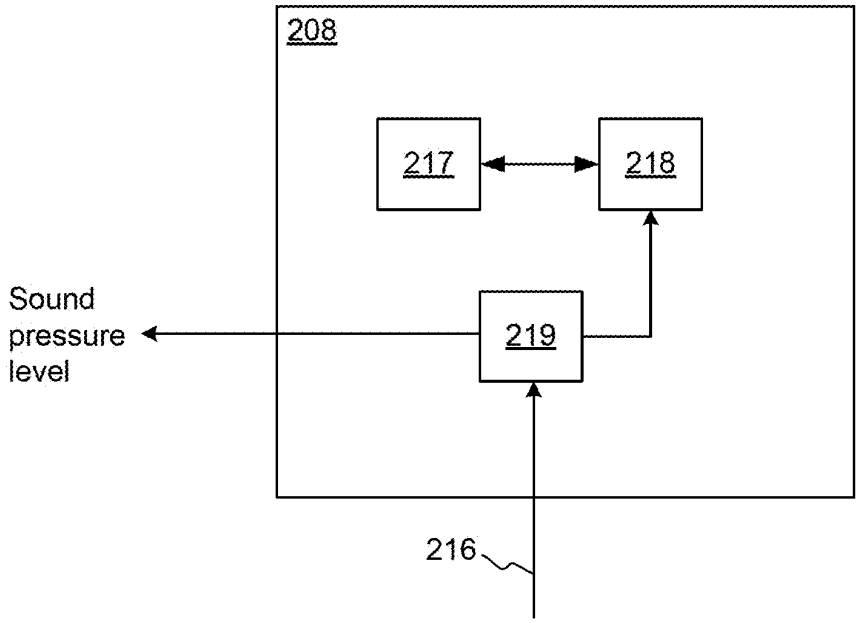

FIG. 7

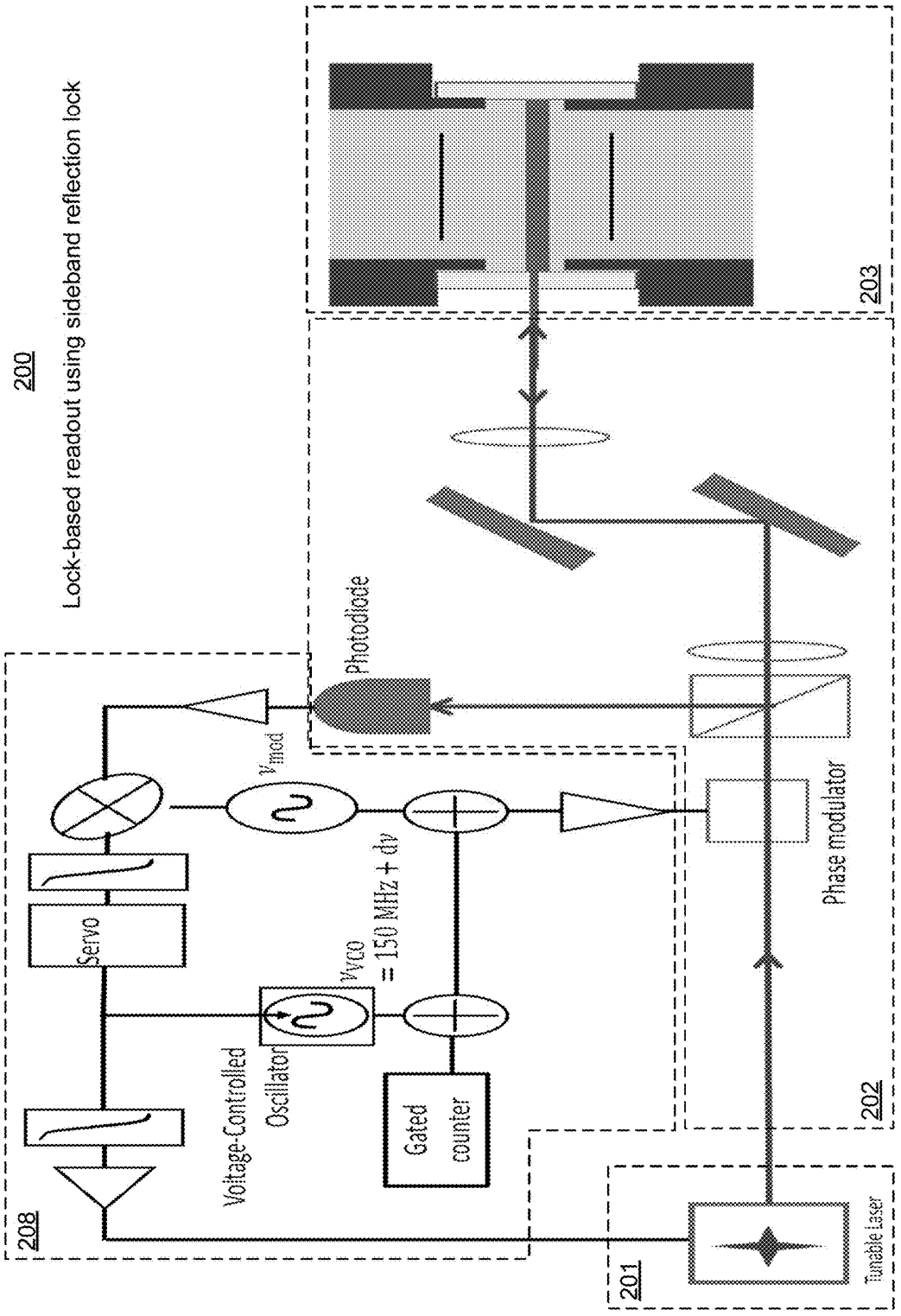
200
Lock-based readout using sideband reflection lock
203
Photodiode
ν_{mod}
Servo
ν_{VCO} = 150 MHz + dν
Voltage-Controlled Oscillator
Gated counter
Phase modulator
202
208
201
Tunable Laser

FIG. 8

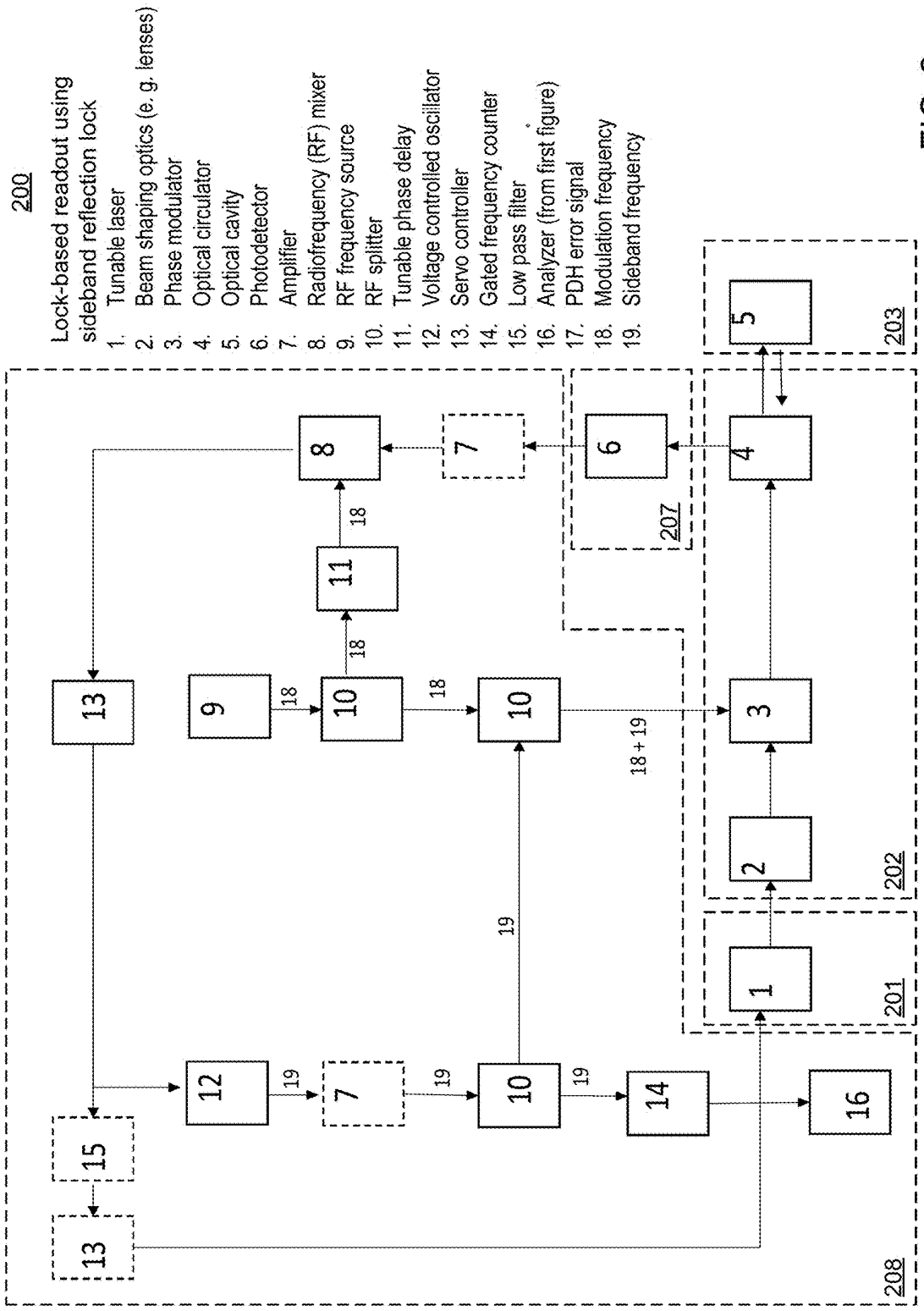
200
Lock-based readout using sideband reflection lock
1. Tunable laser
2. Beam shaping optics (e. g. lenses)
3. Phase modulator
4. Optical circulator
5. Optical cavity
6. Photodetector
7. Amplifier
8. Radiofrequency (RF) mixer
9. RF frequency source
10. RF splitter
11. Tunable phase delay
12. Voltage controlled oscillator
13. Servo controller
14. Gated frequency counter
15. Low pass filter
16. Analyzer (from first figure)
17. PDH error signal
18. Modulation frequency
19. Sideband frequency
18 + 19
201
202
203
207
208

FIG. 9

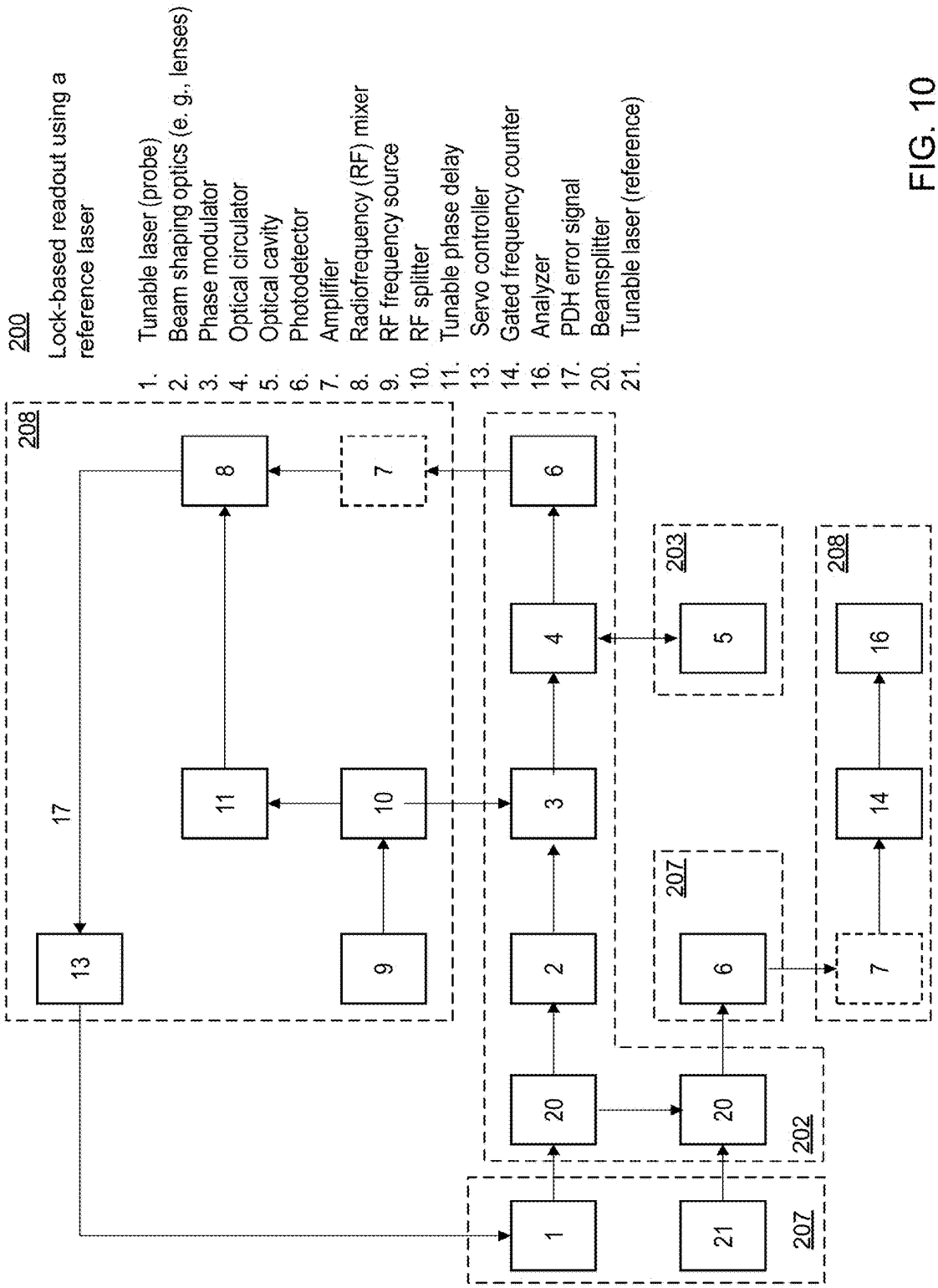
200
Lock-based readout using a reference laser
1. Tunable laser (probe)
2. Beam shaping optics (e. g., lenses)
3. Phase modulator
4. Optical circulator
5. Optical cavity
6. Photodetector
7. Amplifier
8. Radiofrequency (RF) mixer
9. RF frequency source
10. RF splitter
11. Tunable phase delay
13. Servo controller
14. Gated frequency counter
16. Analyzer
17. PDH error signal
20. Beamsplitter
21. Tunable laser (reference)
208
203
207
202
207
208
1
2
3
4
5
6
7
8
9
10
11
13
14
16
17
20
20
21

FIG. 10

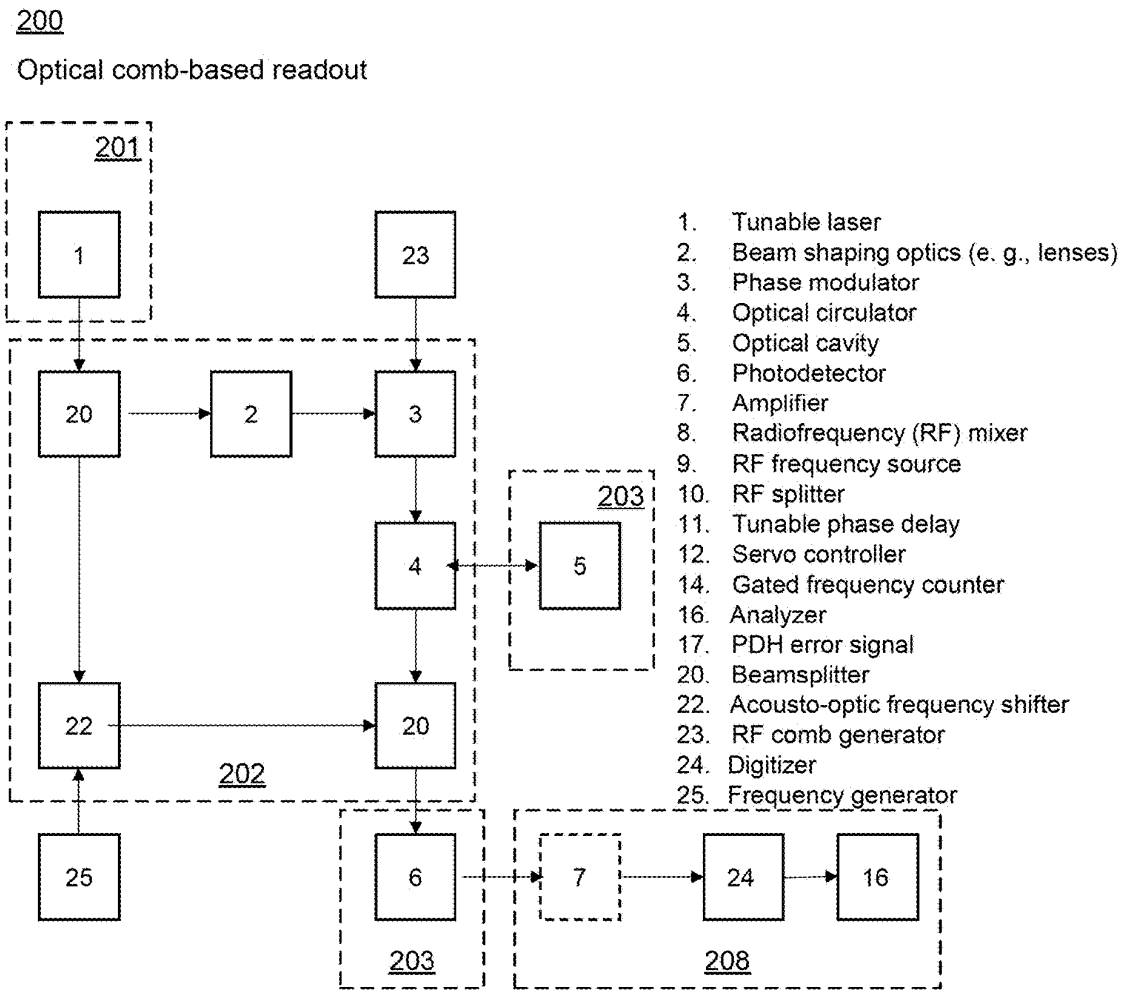
200
Optical comb-based readout
201
1
23
20
2
3
203
4
5
22
20
202
25
6
7
24
16
203
208
1. Tunable laser
2. Beam shaping optics (e. g., lenses)
3. Phase modulator
4. Optical circulator
5. Optical cavity
6. Photodetector
7. Amplifier
8. Radiofrequency (RF) mixer
9. RF frequency source
10. RF splitter
11. Tunable phase delay
12. Servo controller
14. Gated frequency counter
16. Analyzer
17. PDH error signal
20. Beamsplitter
22. Acousto-optic frequency shifter
23. RF comb generator
24. Digitizer
25. Frequency generator

FIG. 11

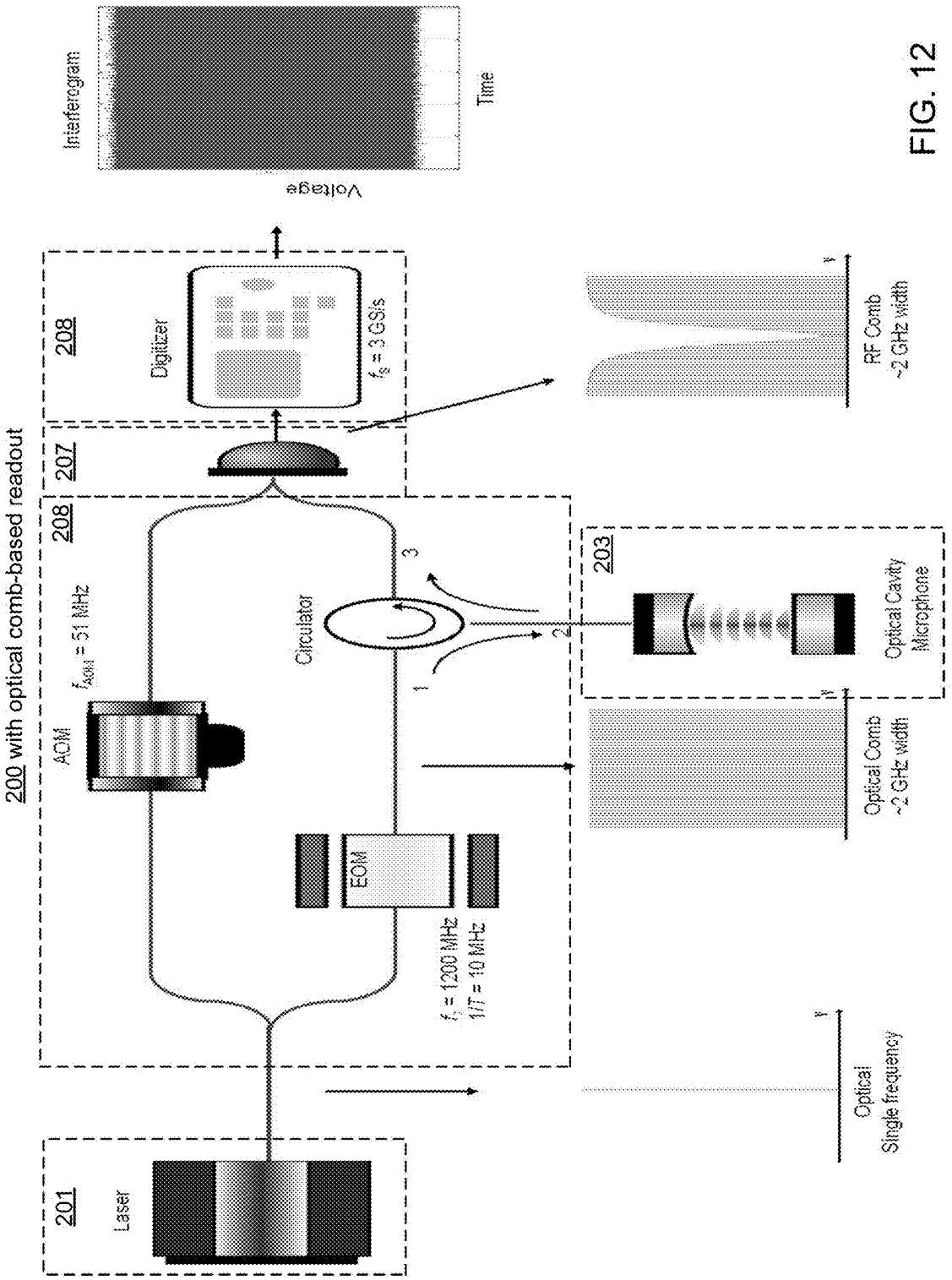
200 with optical comb-based readout
201
Laser
207
208
AOM
f_{AOM} = 51 MHz
Circulator
1
2
3
EOM
f_m = 1200 MHz
1/T = 10 MHz
203
Optical Cavity Microphone
Digitizer
f_s = 3 GS/s
208
Optical Single frequency
Optical Comb ~2 GHz width
RF Comb ~2 GHz width
Interferogram
Voltage
Time

FIG. 12

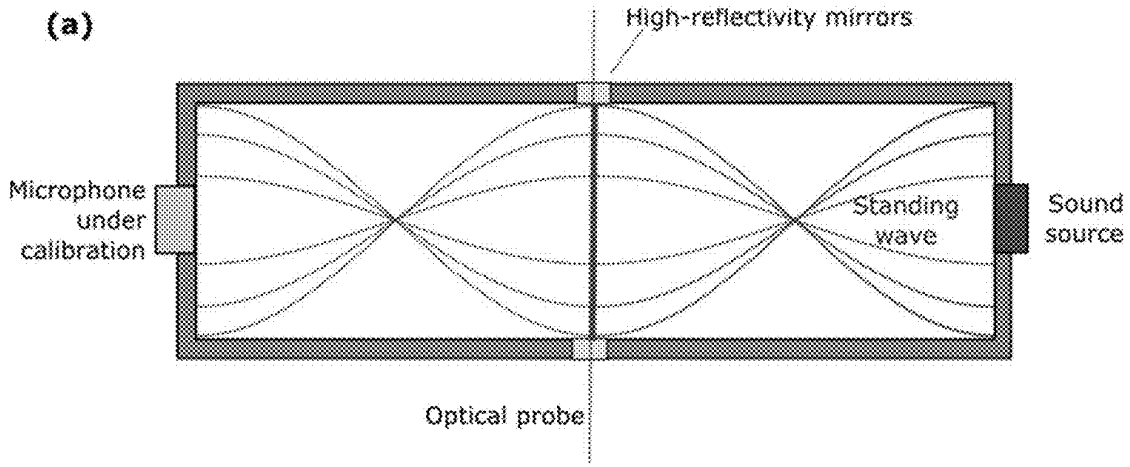
(a)
High-reflectivity mirrors
Microphone under calibration
Standing wave
Sound source
Optical probe

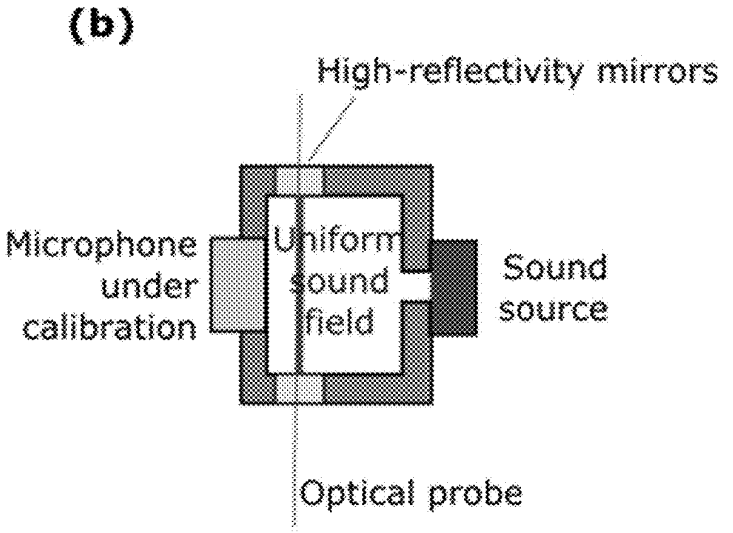
(b)
High-reflectivity mirrors
Microphone under calibration
Uniform sound field
Sound source
Optical probe

FIG. 13

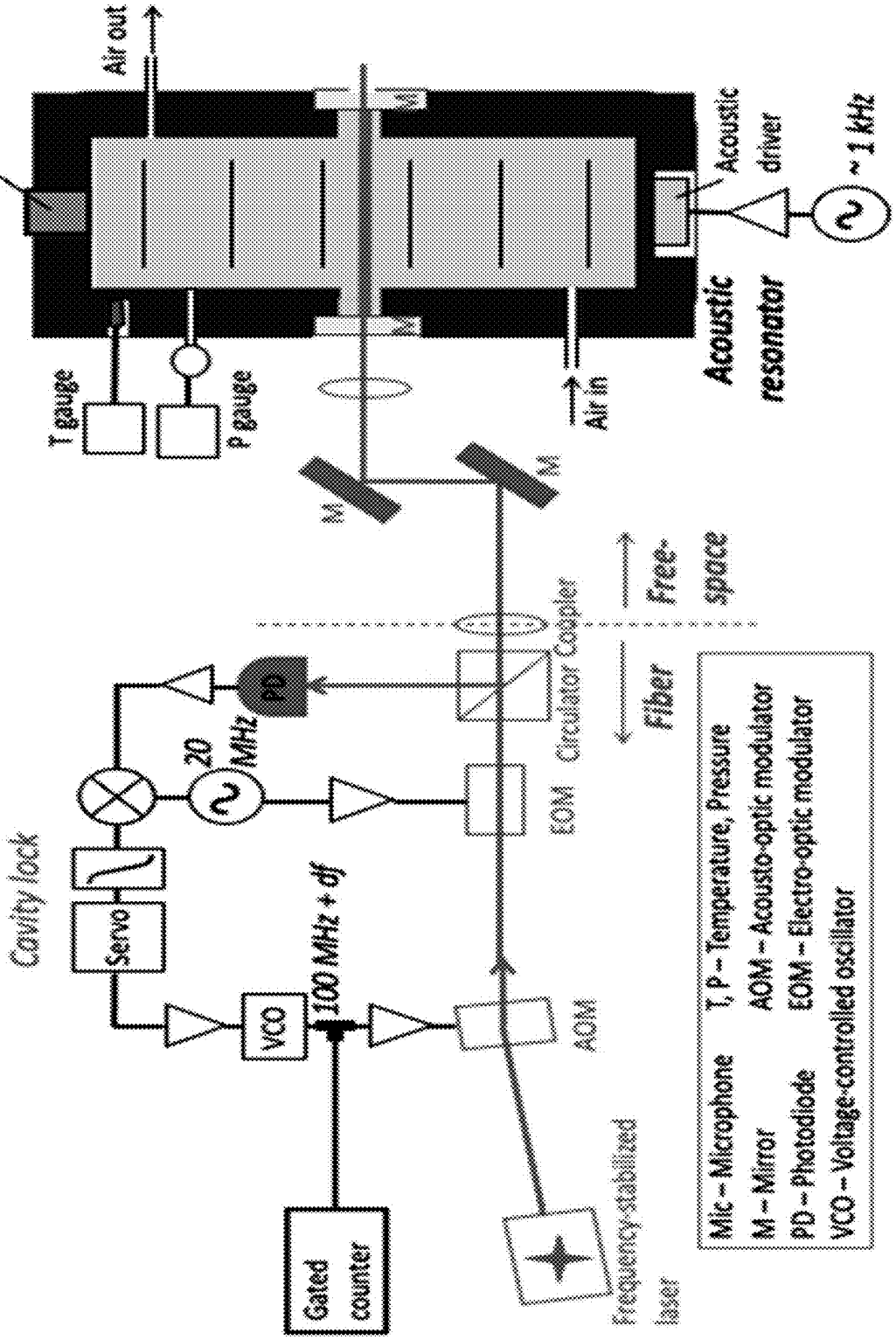
Air out
Mic.
Acoustic driver
~ 1 kHz
Acoustic resonator
T gauge
P gauge
Air in
M
Cavity lock
Servo
VCO
100 MHz + df
20 MHz
PD
EOM
Circulator
Coupler
Fiber
Free-space
AOM
Gated counter
frequency-stabilized laser
Mic – Microphone
M – Mirror
PD – Photodiode
T, P – Temperature, Pressure
AOM – Acousto-optic modulator
EOM – Electro-optic modulator
VCO – Voltage-controlled oscillator

FIG. 14

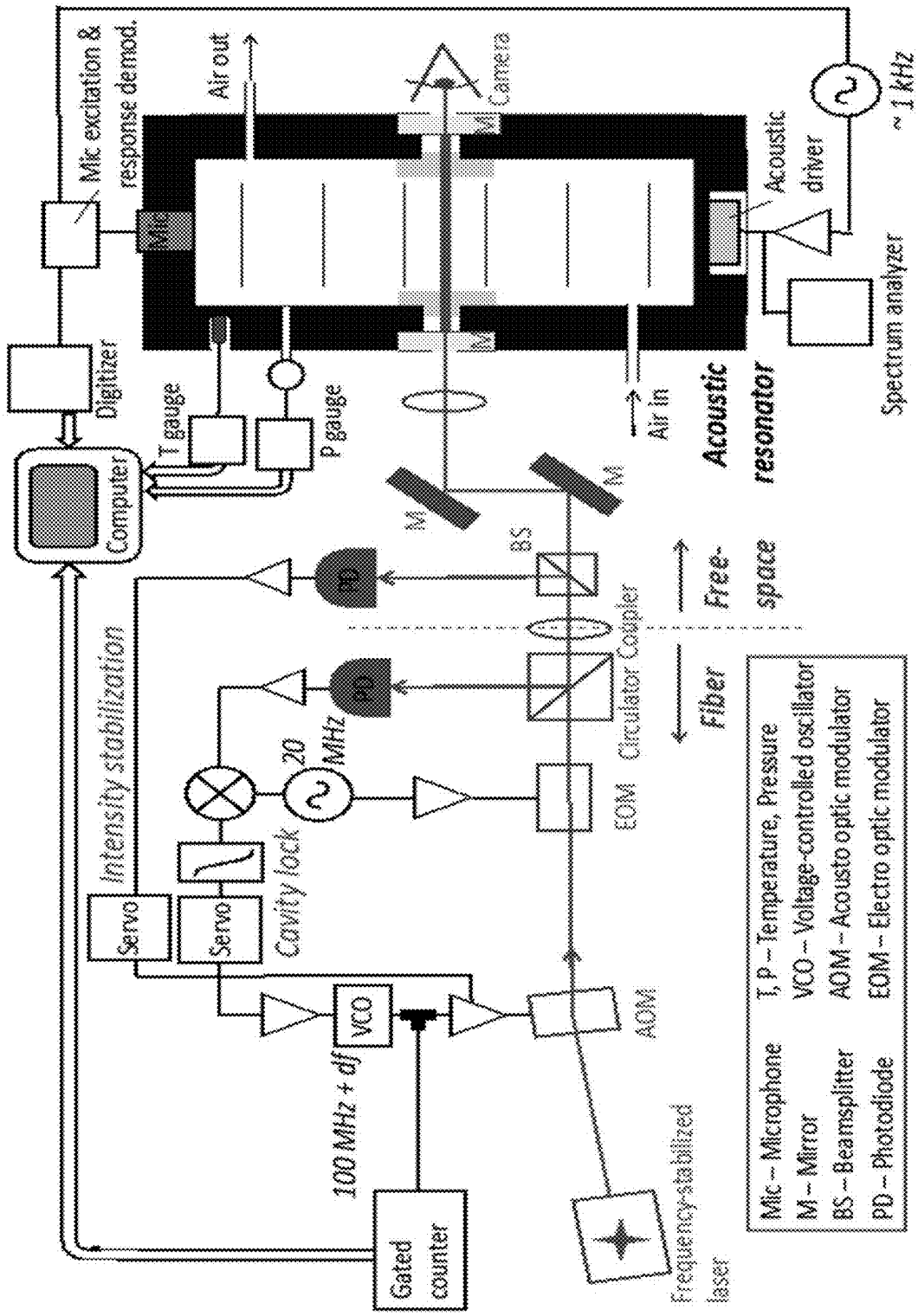
Mic excitation & response demod.
Air out
Camera
Mic
M
Acoustic driver
~ 1 kHz
Digitizer
T gauge
P gauge
Computer
Air in
Acoustic resonator
Spectrum analyzer
M
M
BS
PD
PD
Free-space
Fiber
Circulator
Coupler
Intensity stabilization
20 MHz
EOM
Cavity lock
Servo
Servo
VCO
AOM
100 MHz + df
Gated counter
Frequency-stabilized laser
Mic – Microphone
M – Mirror
BS – Beamsplitter
PD – Photodiode
T, P – Temperature, Pressure
VCO – Voltage-controlled oscillator
AOM – Acousto optic modulator
EOM – Electro optic modulator

FIG. 15

SOUND PRESSURE METROLOGY INSTRUMENT AND DETERMINING SOUND PRESSURE FROM INDEX OF REFRACTION

CROSS REFERENCE TO RELATED APPLICATIONS

[0001] This application claims the benefit of U.S. Provisional Patent Application Ser. No. 63/401,735 (filed Aug. 29, 2022), which is herein incorporated by reference in its entirety.

STATEMENT REGARDING FEDERALLY SPONSORED RESEARCH

[0002] This invention was made with United States Government support from the National Institute of Standards and Technology (NIST), an agency of the United States Department of Commerce. The Government has certain rights in this invention.

BRIEF DESCRIPTION

[0003] Disclosed is a sound pressure metrology instrument for determining sound pressure from index of refraction, the sound pressure metrology instrument comprising: a light source that produces source light and communicates the source light to an optical cavity; the optical cavity disposed in an acoustic medium and in optical communication with the light source, in acoustic communication with a sound source, and in optical communication a photodetector and that: receives an acoustic field from the sound source; receives the source light from the light source; produces acoustic-modified light from the source light in response to the source light interacting with the acoustic field in the optical cavity, such that the acoustic-modified light encodes modulations in the index of refraction of the acoustic medium inside the optical cavity due to the acoustic field; and optically communicates the acoustic-modified light to the photodetector; the photodetector in optical communication with the optical cavity and in electrical communication with an analyzer module and that receives the acoustic-modified light from the optical cavity, produces an acoustic-modified signal from the acoustic-modified light, and communicates the acoustic-modified signal to the analyzer module; the analyzer module in electrical communication with the photodetector and that receives the acoustic-modified signal from the photodetector and determines the sound pressure of the acoustic field produced by the sound source from the modulations in the index of refraction of the acoustic medium inside the optical cavity encoded in the acoustic-modified light.

[0004] Disclosed is a process for determining sound pressure from index of refraction, the process comprising: receiving, by an optical cavity disposed in an acoustic medium, an acoustic field from a sound source; receiving, by the optical cavity, source light from a light source; interacting source light with the acoustic field in the optical cavity; producing an acoustic-modified light from the source light in response to interacting with the acoustic field, such that the acoustic-modified light encodes modulations in the index of refraction of the acoustic medium inside the optical cavity due to the acoustic field; communicating the acoustic-modified light signal to a photodetector; receiving the acoustic-modified light by the photodetector; producing, by the photodetector, an acoustic-modified signal from the acoustic-modified light; communicating the acoustic-modified signal from the photodetector to an analyzer module; and determining, by the analyzer module, the sound pressure of the acoustic field from the modulations in the index of refraction of the acoustic medium encoded inside the optical cavity in the acoustic-modified light.

BRIEF DESCRIPTION OF THE DRAWINGS

[0005] The following description cannot be considered limiting in any way. Various objectives, features, and advantages of the disclosed subject matter can be more fully appreciated with reference to the following detailed description of the disclosed subject matter when considered in connection with the following drawings, in which like reference numerals identify like elements.

[0006] FIG. **1** shows, according to some embodiments, a sound pressure metrology instrument.

[0007] FIG. **2** shows, according to some embodiments, a sound pressure metrology instrument.

[0008] FIG. **3** shows, according to some embodiments, a sound pressure metrology instrument.

[0009] FIG. **4** shows, according to some embodiments, an optical cavity disposed in an acoustic enclosure of a sound pressure metrology instrument, wherein the acoustic enclosure is an acoustic resonator.

[0010] FIG. **5** shows, according to some embodiments, an optical cavity disposed in an acoustic enclosure of a sound pressure metrology instrument, wherein the acoustic enclosure is an acoustic coupler.

[0011] FIG. **6** shows, according to some embodiments, an optical cavity assembly.

[0012] FIG. **7** shows, according to some embodiments, an analyzer module.

[0013] FIG. **8** shows, according to some embodiments, a sound pressure metrology instrument.

[0014] FIG. **9** shows, according to some embodiments, a sound pressure metrology instrument that includes a lock-based readout using sideband reflection lock.

[0015] FIG. **10** shows, according to some embodiments, a sound pressure metrology instrument that includes a lock-based readout using a reference laser.

[0016] FIG. **11** shows, according to some embodiments, a sound pressure metrology instrument that includes an optical comb-based readout.

[0017] FIG. **12** shows, according to some embodiments, a sound pressure metrology instrument that includes an optical comb-based readout.

[0018] FIG. **13** shows, according to some embodiments: (a) an acoustic resonator configuration of optical sound standard. The blue curves indicate the distribution of acoustic pressure along the resonator length at different time instants; the acoustic pressure is probed at a pressure antinode of a standing plane wave. (b) An acoustic coupler configuration of optical sound standard, in which the acoustic pressure within the coupler volume is uniform.

[0019] FIG. **14** shows, according to some embodiments, a Pound-Drever-Hall readout system for cavity resonance frequency tracking, wherein a gated counter with a high-repetition rate is used to make instantaneous readings of the cavity resonance frequency shift.

[0020] FIG. **15** shows, according to some embodiments, a primary sound standard configured for calibrating microphones, using an acoustic resonator.

DETAILED DESCRIPTION

[0021] A detailed description of one or more embodiments is presented herein by way of exemplification and not limitation.

[0022] The are several conventional methods for performing primary sound pressure measurements, primary meaning that the sound pressure is not determined by already having a calibrated sound pressure measuring or generating instrument to use as a reference. A conventional method is the reciprocity method that relies on the properties of linear reversible transducers to calibrate their linear sensitivities without prior knowledge of the acoustic field characteristics such as the sound pressure.

[0023] As described herein, sound pressure metrology instrument **200** and determining sound pressure from index of refraction overcome certain deficiencies of measurements based on primary references calibrated using the reciprocity method. Sound pressure metrology instrument **200** measures the sound pressure directly and does not require the use of reciprocal transducers to achieve a primary sound calibration or measurement. Further, sound pressure metrology instrument **200** can provide increased accuracy and primary calibration over a wider range of sound frequencies compared to conventional methods. Sound pressure metrology instrument **200** measures sound pressure that is superior to conventional methods in that sound pressure metrology instrument **200** directly realizes the sound pressure and is applicable to direct primary sound measurements and to calibration of a wide variety of sound sources and sensors, can be more accurate than conventional methods, and can be applicable to a wider range of sound frequencies than conventional methods while providing traceability of sound pressure to quantum standards.

[0024] It has been discovered that sound pressure metrology instrument **200** can include a high-finesse optical cavity and measures sound-driven refractive index oscillation in a gas or fluid and determines sound pressure from a dependence of the refractive index on pressure. Advantageously, determining sound pressure from index of refraction with sound pressure metrology instrument **200** can be implemented in a closed volume structure such as an acoustic resonator or coupler or implemented in an open environment. Beneficially, determining sound pressure level from index of refraction with sound pressure metrology instrument **200** provides SI-traceable measurement of acoustic pressure and allows calibration of acoustic instruments (microphones, sound level meters, pistonphones, loudspeakers, and the like), wherein SI refers to International System of Units. The acoustic pressure can be quantum traceable by first principles calculations of refractive index of the medium, or by measurements that determine the refractive index of the medium in terms of those of another medium (e.g., helium) for which high-accuracy first principles calculations are available.

[0025] It should be appreciated that traceability is the ability to relate a measurement result to a reference through an unbroken chain of calibrations, each of which contributes to the measurement uncertainty. Measurement uncertainty is a quantitative expression of the degree of doubt that exists about the correctness of a measurement result. Traceability allows one to compare measurements made in different laboratories or at different times and to ensure that they are consistent with each other. Traceability ensures the accuracy of measurements as it allows quantification of the uncertainty associated with a measurement result.

[0026] Relatedly, SI traceability is the ability to relate a measurement result to the SI units through an unbroken chain of calibrations. The SI units are the International System of Units, and they are the most widely used system of units in the world. SI traceability is important for ensuring that measurements are made in a consistent and accurate manner. There are a number of ways to achieve SI traceability. One way is to use a calibrated instrument that has been calibrated in a manner traceable to the SI units. Another way is to use a primary measurement method that determines the measurement result by combining contributing observations and measurements according to accurately known relationships, with any significant such contributing measurements having been themselves made in a manner traceable to their SI units.

[0027] Sound pressure metrology instrument **200** determines sound pressure from index of refraction. As used herein, sound pressure refers to a complex quantity, composed of both an amplitude and a phase. The phase is defined with respect to a reference quantity or signal, the choice of which is arbitrary. In some cases, only the amplitude of the sound pressure can be determined. In some cases, only the phase of the sound pressure can be determined. In some cases, the sound pressure can be a spectral content or another alternative representation, which can include a part of the information represented by the complex sound pressure. In an embodiment, with reference to FIG. **1**, FIG. **2**, FIG. **3**, FIG. **4**, FIG. **5**, FIG. **6**, FIG. **8**, FIG. **9**, FIG. **10**, FIG. **11**, and FIG. **12**, sound pressure metrology instrument **200** for determining sound pressure from index of refraction includes: light source **201** that produces source light **214** and communicates source light **214** to optical cavity **203**; optical cavity **203** disposed with acoustic medium **205**, such that part or all of acoustic medium **205** is within the optical mode volume of optical cavity **203**, and in optical communication with light source **201**, in acoustic communication with sound source **206**, and in optical communication photodetector **207** and that: receives acoustic field **204** from sound source **206**; receives source light **214** from light source **201**; produces acoustic-modified light **215** from source light **214** in response to source light **214** interacting with acoustic field **204** in optical cavity **203**, such that acoustic-modified light **215** encodes modulations in the index of refraction of acoustic medium **205** inside optical cavity **203** due to acoustic field **204**; and optically communicates acoustic-modified light **215** to photodetector **207**; photodetector **207** in optical communication with optical cavity **203** and in electrical communication with analyzer module **208** and that receives acoustic-modified light **215** from optical cavity **203**, produces acoustic-modified signal **216** from acoustic-modified light **215**, and communicates acoustic-modified signal **216** to analyzer module **208**; analyzer module **208** in electrical communication with photodetector **207** and that receives acoustic-modified signal **216** from photodetector **207** and determines by primary means based on the refractive index dependence on sound pressure the acoustic pressure of acoustic field **204** from modulations in the index of refraction of acoustic medium **205** inside the optical mode volume of optical cavity **203** encoded in acoustic-modified light **215**. It is contemplated that the acoustic medium **205** can be partially or wholly disposed in optical cavity **203**.

[0028] In an embodiment, sound pressure metrology instrument **200** includes supplemental sensor **209** in communication with analyzer module **208**, produces supplemental sensor signal **217**, and communicates supplemental sensor signal **217** to analyzer module **208**. In an embodiment, supplemental sensor **209** includes a temperature sensor, humidity sensor, pressure sensor, mass spectrometer, chromatograph, or wave meter that measures a temperature, humidity, static background pressure, or composition of acoustic medium **205** in optical cavity **203** or optical frequency or wavelength of source light **214** or acoustic-modified light **215**. In an embodiment, supplemental sensor **209**: measures a temperature, humidity, static background pressure, or composition of acoustic medium **205** in optical cavity **203** or optical frequency or wavelength of source light **214** or acoustic-modified light **215**, and communicates temperature, humidity, static background pressure, or composition of acoustic medium **205** in optical cavity **203** or optical frequency or wavelength of source light **214** or acoustic-modified light **215** as supplemental sensor signal **217** to analyzer module **208**. In an embodiment, analyzer module **208** receives supplemental sensor signal **217** from supplemental sensor **209**, and analyzer module **208** uses supplemental sensor signal **217** to improve the fidelity of the determination of the sound pressure.

[0029] In an embodiment, analyzer module **208** determines sound pressure from the index of refraction based on

$$\Delta p = \Delta n \left(\frac{dn}{dp}\right)_X^{-1}$$

wherein X is a condition on the derivative and is adiabatic, isothermal, or polytropic; n is index of refraction of acoustic medium **205**; and p is sound pressure.

[0030] In an embodiment, sound pressure metrology instrument **200** includes sound source **206**.

[0031] In an embodiment, sound pressure metrology instrument **200** includes acoustic enclosure **210** in which is disposed optical cavity **203**, acoustic medium **205**, sound source **206**, and acoustic field **204**. In an embodiment the optical cavity **203** shares common boundaries with acoustic enclosure **210**, these common boundaries forming a part or whole of the boundaries of optical cavity **203** or acoustic enclosure **210**. In an embodiment, optical cavity **203** is external to acoustic enclosure **210**, and a part or whole of acoustic enclosure **210** is disposed in optical cavity **203**. In an embodiment, acoustic enclosure **210** is an acoustic resonator, wherein acoustic enclosure **210** supports a standing acoustic wave at an acoustic wavelength λ_{ac}=L/N, wherein N is an integer, and L is a distance of separation of sound source **206** and microphone **212** that are disposed in acoustic enclosure **210** disposed on its walls. In an embodiment, acoustic enclosure **210** is an acoustic coupler with dimensions that are smaller than the acoustic wavelength, wherein acoustic field **204** has an approximately constant acoustic pressure in acoustic enclosure **210**.

[0032] In an embodiment, sound pressure metrology instrument **200** incudes sound source driver **211** in electrical communication with sound source **206** and that provides driver signal **218**, communicates driver signal **218** to sound source **206**, and controls production of acoustic field **204** by sound source **206** with driver signal **218**.

[0033] In an embodiment, sound pressure metrology instrument **200** includes microphone **212** in acoustic communication with sound source **206** such that optical cavity **203** is acoustically interposed between sound source **206** and microphone **212**, such that microphone **212** receives acoustic field **204** that propagates through optical cavity **203** from sound source **206**, produces microphone signal **219** from acoustic field **204**, and communicates microphone signal **219** to microphone receiver **213**. In an embodiment, sound pressure level metrology instrument **200** includes microphone receiver **213** in electrical communication with microphone **212** and receives microphone signal **219** from microphone **212**, produces acoustic signal **221** from microphone signal **219**, and communicates the acoustic signal **221** to analyzer module **208**, such that the sound pressure level measured by analyzer module **208** is compared with microphone signal **219** from microphone **212** to calibrate the sensitivity of microphone **212**. The microphone sensitivity can be a complex quantity, having an amplitude and a phase. The phase is defined with respect to a reference quantity or signal, often the acoustic pressure at a specified location, although other choices of phase reference are possible. In some cases, only the amplitude of the sensitivity may be determined. In some cases, only the phase of the sensitivity may be determined. In some cases, the obtained sensitivity may be a spectral content or another alternative representation, which may contain only a part of the information represented by the complex sensitivity.

[0034] In an embodiment, sound pressure metrology instrument **200** includes microphone **212** in acoustic communication with sound source **206** with optical cavity **203**, sound source **206**, and microphone **212** with relative locations and orientations such that the optical cavity is not acoustically interposed between sound source **206** and microphone **212**. The sound pressure metrology instrument **200** determines the sound pressure at the location of optical cavity **203** and from this determines sound pressure at the location of microphone **212**, which can be the same as or different than the sound pressure at the location of optical cavity **203**.

[0035] In an embodiment, sound pressure metrology instrument **200** measures the sound pressure in a fluid medium, e.g., a gas, by using an optical cavity to observe the change in the medium's refractive index due to the sound pressure. A light source (e.g. a laser, multiple lasers, or an optical frequency comb) generates coherent optical light. The light travels to an optical cavity via an optical path. The optical path can be wholly or partially in vacuum, air or other fluid, or in fiber or other solid state waveguiding structure, and the light may traverse multiple optical and electro optical elements that modify its characteristics as it travels along the optical path. The acoustic field modulates the index of refraction of the medium probed by the light in the optical cavity, which in turn changes the cavity's optical path length and measurable properties of the optical cavity **203** such as resonant frequency, reflected phase, round trip phase, transmitted power of light of a specified frequency, reflected power of light of a specified frequency, and the like. A portion of the light beam that is either reflected or transmitted by the cavity is detected by a photodetector. This signal then goes through data processing steps in analyzer module **208** to determine the measured sound pressure. Accordingly, sound pressure metrology instrument **200** provides a low-uncertainty measurement of the sound pressure,

which can be used to calibrate microphones or sound sources. In addition, sound pressure metrology instrument **200** could be used as an intrinsically traceable microphone.

[0036] In an embodiment, with reference to FIG. **1**, sound pressure metrology instrument **200** accurately measuring the sound pressure without an external calibration by detecting modulations in the index of refraction of acoustic medium **205** inside optical cavity **203** and using relationships between sound pressure and index of refraction. Here, an acoustic signal generated by a source and propagates in an acoustic medium. The sound source may be a speaker that is a component of the apparatus, or it may be external to the apparatus (e.g., ambient sound). The acoustic medium could be a gas, such as air, or a liquid and is present inside and outside of the optical cavity. To measure the sound at the location of the optical cavity, light is emitted from a light source (e.g., a laser or optical frequency comb) and is communicated along an optical path to the optical cavity. The optical path can be free space or an optical fiber and can include optical elements (e.g., waveplates, beam splitters, mirrors, lenses, modulators, and the like) to manipulate the polarization, direction, shape, or phase of the optical beam. The optical cavity is a narrowband optical frequency filter with optical resonances at frequencies that depend upon the physical length of the cavity and the index of refraction of the acoustic medium inside the cavity. These optical resonances oscillate at the acoustic frequency or frequencies at an amplitude proportional to the sound pressure due to modulations of the acoustic medium's index of refraction. After interacting with the optical cavity, the light communicates along another optical path and is detected by a photodetector. The electronic signal from the photodetector is sent to an analyzer, wherein the signal is analyzed to determine the frequency and amplitude at which a resonance of the optical cavity is moving, the corresponding changes to the index of refraction of the acoustic medium inside the cavity using a known relationship between the change in the optical cavity resonances and the index of refraction, and the corresponding sound pressure using a known relationship between the pressure of the acoustic medium and the index of refraction. Optionally, additional sensors can also supply other inputs to the analyzer to improve the fidelity of the calculation. Some examples include measurements of the optical frequency or wavelength, acoustic medium composition, acoustic medium temperature, relative humidity, and static pressure.

[0037] In an embodiment, with reference to FIG. **2**, sound pressure metrology instrument **200** calibrates the sensitivity of a sound source. Here, the optical cavity **203**, acoustic medium **205**, sound source **206**, and acoustic field **204** can be disposed in an optional acoustic enclosure **210**. A sound source driver **211** sends an electrical signal **218** to the sound source **206** to control the acoustic field. The sound pressure determined by the analyzer **208** can be compared with the drive signal from to calibrate the sensitivity (e.g. Pa/V, Pa/A, $m^3/s/V$, and the like) of the sound source. The sound pressure can be compared to a setting or input to the sound source driver **211** to calibrate the sensitivity (e.g. Pa per input setting, m^3/s per input setting, and the like) of the combination of the sound source driver **211** and sound source **206**. It is noted that sound source sensitivity (and likewise sensitivity of the combination of sound source and sound source driver) is in general a complex quantity, composed of both an amplitude and a phase. The phase is defined with respect to a reference quantity or signal, often the acoustic pressure at a specified location, although other choices of phase reference are possible. In some cases only the amplitude of the sensitivity may be determined. In some cases only the phase of the sensitivity may be determined. In some cases the obtained sensitivity may be in the form of a spectral content or another alternative representation, which may contain only a part of the information represented by the complex sensitivity.

[0038] In an embodiment, with reference to FIG. **3**, sound pressure metrology instrument **200** calibrates the sensitivity of a microphone. Here, the optical cavity **203**, acoustic medium **205**, sound source **206**, acoustic field **204**, and microphone **212** can be disposed in an acoustic enclosure **210**. Alternatively there may be no acoustic enclosure. A sound source driver **211** sends and electrical signal to the sound source to control the acoustic field. The geometry of the acoustic enclosure can ensure that the sound pressure at the location of the optical cavity **203** has a known relationship to the sound pressure and other acoustic properties at the location of the microphone **212**. The microphone response is measured by a microphone receiver **213**. The sound pressure measured by the analyzer **208** is compared with the microphone response to calibrate the sensitivity (e.g., V/Pa) of the microphone **212**.

[0039] Sound pressure metrology instrument **200** can be made of various elements and components that can be assembled together or fabricated. Elements of sound pressure metrology instrument **200** can be various sizes and shapes. A size and shape of optical cavity **203**, and acoustic enclosure **210** for embodiments including such an enclosure, are selected to support optical interrogation and sampling of acoustic field **204**.

[0040] Elements of sound pressure metrology instrument **200** can be made of a material that is physically or chemically resilient in an environment in which sound pressure level metrology instrument **200** is disposed. Exemplary materials include a metal, ceramic, thermoplastic, glass, semiconductor, and the like. The elements of sound pressure metrology instrument **200** can be made of the same or different material and can individually be monolithic as single physical bodies or can be composed of separate members that are phsiycially joined or separated.

[0041] Sound pressure metrology instrument **200** can include elements that measure sound by measuring an amplitude variation of optical refractive index of acoustic medium **205** in the region of acoustic field **204** and analyzing, e.g., calculating such, from the amplitude of the pressure, temperature, or density oscillation.

[0042] The light source **201** is a device that emits light. It can be a laser, an optical frequency comb, an LED, or another type of light source. The light source **201** emits light at one or more wavelengths that are resonant with a resonant frequency of optical modes of optical cavity **203**. The light source **201** emits light at a high enough power level to produce a measurable amount of acoustic-modified light **215** as detected by photodetector **207**. The light source **201** can output light at a wide range of wavelengths. The specific wavelengths that the light source **201** emits can depend on the type of light source that is used. The light source **201** can also output light at a wide range of power levels. The specific power level that the light source **201** emits can depend on the application.

[0043] The light source **201** can be operated at a specific wavelength and power level to produce a measurable signal from photodetector **207**. The wavelength of emission and power level of the light source **201** can optionally be adjustable using the controls on the sound pressure metrology instrument **200**.

[0044] There are many different types of light sources that can be used in the sound pressure metrology instrument **200** and can include lasers, LEDs, optical frequency combs, incandescent bulbs, and the like. Different types of light source may have relative advantages and disadvantages.

[0045] To operate the light source **201**, connect it to the sound pressure metrology instrument **200** and turn on the power to the sound pressure metrology instrument **200**. The light source **201** can be automated to automatically turn on and begin emitting light. To adjust the wavelength and power level of the light source **201**, controls on the sound pressure metrology instrument **200** can be used. For example, the wavelength of the light source **201** can be adjusted by turning a wavelength knob. The power level of the light source **201** can be adjusted by turning a power knob. Alternatively, operating parameters can be adjusted using digital control.

[0046] With the light source **201** is operating, optional sound source **206** can be disposed in its selected location and operated to produce an acoustic field **204** that interacts with source light **214**. Alternatively the sound source **206** can be operated to produce the acoustic field prior to turning on the light source or simultaneously with turning on the light source. The interaction of the light with the acoustic medium **205** that is modified by the acoustic field **204** causes conversion from source light **214** to acoustic-modified light **215**, and the change in optical properties between source light **214** and acoustic-modified light **215** encodes the sound pressure of the acoustic field. That is, the sound pressure of the acoustic field can be determined by measuring the optical properties of acoustic-modified light **215**. This can be done using photodetector **207** such as a photodiode, spectrometer, power meter, and the like. The sound pressure of the acoustic field can be displayed on a display of the sound pressure metrology instrument **200**.

[0047] The light source **201** can be any type of light source that produces light in from the ultraviolet to the far-infrared parts of the spectrum. The source light **214** is selected to have one or more wavelengths that are resonant or nearly resonant inside the optical cavity **203**. The light source **201** can be operated at a constant output power. The average output power of the light source **201** can be from 1 nW to 1 MW. The light source can be of a pulsed nature.

[0048] The light source **201** can be secured to the optical cavity **203**. The light source **201** can be connected to the optical cavity **203** by an optical fiber. The light source **201** can be operated by a microcontroller. The microcontroller can control operation of the other components of the sound pressure metrology instrument **200**.

[0049] The source light **214** can have a number of selectable properties. It can be coherent such that the waves of light can be in phase with each other. This can produce a focused beam of light. It can be monochromatic to resonantly interact with optical cavity **203** or acoustic field **204**. It can have a variable power output to produce a strong enough signal as acoustic-modified light **215** to be detected by the photodetector **207**. Source light **214** that can include light with wavelengths from 100 nm to 100,000 nm. Operation with a laser wavelength near 1550 nm can provide integration with a large number of fiber optic components designed for telecommunications, making sound pressure metrology instrument **200** scalable and compatible with off-the-shelf optical characterization tools.

[0050] Acoustic-modified light **215** is a product of source light **214** modified by interaction with acoustic field **204**. This is a result of passing source light **214** through acoustic medium **205** that is subjected to acoustic field **204**. The result is that acoustic-modified light **215** can encode modulations due to acoustic field **204** and can have a different frequency, wavelength, phase, power, spatial distribution, polarization or the like, than source light **214** did before source light **214** modified by acoustic field **204**. The range of outputs of acoustic-modified light **215** depends on the strength of acoustic field **204** and the properties of acoustic medium **205** through which source light **214** is passing. In general, the stronger the acoustic field, the greater the change in the light's properties. There can be different types of acoustic-modified light. Linear acoustic-modified light has been modified in a linear fashion by the acoustic field. This means that the change in the light's properties is directly proportional to the strength of the acoustic field. Nonlinear acoustic-modified light is modified in a nonlinear fashion by the acoustic field. This means that the change in the light's properties is not directly proportional to the strength of the acoustic field.

[0051] The optical path **202** of the sound pressure metrology instrument **200** is a region of space within which light travels. It can be defined by the surfaces of the optical components that make up the path, such as lenses, mirrors, and prisms. The optical path may also be defined by the presence of a medium, such as air or water or other fluid, through which the light travels. The optical path may be partially or entirely in a solid medium such as an optical fiber or in other solid-state waveguiding structures. Solid-state waveguiding structures defining the optical path or portions thereof may be of a microfabricated nature, and such microfabricated structures may include the light source **201**. The optical path may be partially or entirely in vacuum. The physical properties of optical path **202** for sound pressure level metrology include length, refractive index, dispersion, imparted phase shift, imparted frequency shift, imparted polarization change, and the like. The optical path **202** of the sound pressure metrology instrument **200** can produce a wide range of outputs, depending on the design of the instrument.

[0052] The optical path **202** of the sound pressure metrology instrument **200** can be assembled and can involve aligning the optical components and ensuring that they are properly connected to the instrument. The optical path or components thereof can be made by a variety of methods, including machining, molding, drawing, microfabrication, and casting. The choice of manufacturing method depends on the nature of the optical path and components thereof.

[0053] The optional sound source **206** of the sound pressure metrology instrument **200** produces acoustic field **204**. The acoustic field **204** is a disturbance in the pressure of a medium, such as air, that propagates through the medium as a wave. The acoustic field may be produced by a sound source **206** or may be the acoustic field resulting from unidentified origins in the environment of the acoustic metrology instrument **200** or within the acoustic metrology instrument **200**. The optional sound source **206** can be any

device that generates acoustic field **204**, such as a loudspeaker, a siren, or tuning fork, mechanical vibration, voice, and the like. The sound source **206** can be characterized by its frequency range, its output level, and its directivity. The frequency range is the range of frequencies that the sound source **206** can generate. The output level is the maximum sound pressure that the sound source **206** can produce. The directivity is the way in which the sound energy is distributed in space.

[0054] The optional sound source **206** can be operated by applying an electrical signal to it, e.g., driver signal **218** from sound source driver **211**. The electrical signal may control the amplitude or frequencies of the acoustic field **204** that the sound source **206** generates.

[0055] The optional sound source **206** can be made from a variety of materials, including metals, plastics, glasses, and ceramics. The materials used for the sound source **206** can affect its frequency range, output level, and directivity. The sound source **206** can be made by assembling the various components into a housing. The housing can be made from a variety of materials, such as metal, plastic, or wood. The housing can protect the sound source **206** from the elements and can help to direct the sound energy in a desired direction. In some instances, sound source **206** is an unknown source that produces acoustic field **204** or a manufactured product subject to calibration.

[0056] The sound source **206** may be a constituted of several different devices that can create sound, which may be similar or different to each other, and which may each produce sound that has similar or different characteristics as described by properties such as frequency, sound pressure, intensity, directivity, etc. Some of the devices constituting sound source **206** may be unknown.

[0057] Physical properties of sound source **206** can determine its performance. The frequency range, e.g., as expressed in Hertz (Hz) is the range of frequencies that the sound source **206** can generate. The output level is the maximum sound pressure that the sound source **206** can produce, in a defined spatial location and surrounding environment, for example averaged over the optical cavity **203** in the acoustic environment within acoustic enclosure **210**. The output level can be expressed in decibels (dB). The directivity is the way in which the sound energy is distributed in space. The directivity can be shown in a polar plot. The sound source **206** can generate a wide range of outputs, from below zero decibels to greater than 140 decibels. The output level of the sound source **206** can be controlled by the electrical signal that is applied to it. The electrical signal controls the amplitude and frequencies of the acoustic field **204** that the sound source **206** generates. The operating parameters of the sound source **206** ensure that it is operating correctly, including the voltage of the electrical signal that is applied to the sound source **206**, current that flows through the sound source **206**, or power that is dissipated by the sound source **206**.

[0058] The sound source **206** can produce a wide range of acoustic frequencies and output levels. The frequency range of sound source **206** can be from 0.001 Hz to 10 GHz. The output level range of sound source **206** can be from −20 dB to 200 dB.

[0059] There are a variety of types of sound sources that can be used in the sound pressure metrology instrument **200**. Piezoelectric transducers convert electrical signals into sound waves and can generate a wide range of frequencies. Loudspeakers are electroacoustic transducers that convert electrical signals into sound waves and can generate a wide range of frequencies. Sirens are mechanical devices that generate sound waves by rotating a blade or disc and can generate a high-pitched tone. Tuning forks are mechanical devices that generate sound waves by vibrating a metal prong and can generate a pure tone.

[0060] The sound source **206** can be made from a variety of materials, including metals, plastics, and ceramics. The materials used for the sound source **206** can affect its frequency range, output level, and directivity.

[0061] The acoustic field **204** is the pattern of acoustic energy propagation, in the form of time-varying density, pressure, temperature, etc. at various spatial locations in the acoustic medium **205**, that is generated by the sound source **206**. The acoustic field **204** interacts with source light **214** in optical cavity **203** and causes the index of refraction of the acoustic medium **205** to vary. This variation in the index of refraction is encoded in the acoustic-modified light **215**, which is then detected by the photodetector **207**. The analyzer module **208** then determines the sound pressure of the acoustic field **204** from the modulations in the index of refraction of the acoustic medium **205** encoded in the acoustic-modified light **215**.

[0062] The acoustic field **204** has a number of physical properties that are important for its operation in the sound pressure metrology instrument **200**. The acoustic field is made up of sound waves with a range of frequencies, and this range can be narrow such that the acoustic field **204** is described as having a single frequency. The frequency of a sound wave is the number of cycles per second that the wave repeats and determines the wavelength of the wave, the distance between two successive peaks or troughs of the wave. The wavelength of a sound wave is the distance between two successive peaks or troughs of the wave. The acoustic field is made up of sound waves with a range of wavelengths, and this range can be narrow such that the acoustic field **204** is described as having a single wavelength. The pressure amplitude of the change in the pressure of the medium from its mean value. The density amplitude of the acoustic field **204** is the maximum change in the density of the medium from its mean value. The temperature amplitude of the acoustic field **204** is the maximum change in the temperature of the medium from its mean value. The intensity of the acoustic field **204** is the amount of energy that acoustic waves carries per unit area. The power of the acoustic field **204** is the rate at which energy is transferred by the waves. The operating parameters of the acoustic field **204** are the conditions under which the acoustic field **204** is generated and propagated. These parameters include the frequency or frequencies of the acoustic field **204**, the wavelength or wavelengths of the acoustic field **204**, the density amplitude of the acoustic field **204**, the pressure amplitude of the acoustic field **204**, and the temperature amplitude of the acoustic field **204**. There are a variety of different types of acoustic fields **204** that can be used in the sound pressure level metrology instrument **200**. These types of acoustic fields **204** include simple waves such as plane waves, spherical waves, and cylindrical waves, as well as waves that are combinations of these simple waves, and which may be combinations of a few such simple waves, or may be complex fields (e.g. “diffuse fields”) consisting in principle of combinations of large numbers of such simple waves. The combination of simple waves constituting a

complex field may not be known. The acoustic field **204** can include speech, music, and environmental noise as produced from various sources including industrial processes, such as manufacturing and construction.

[0063] In an embodiment, the acoustic field **204** is created in acoustic enclosure **210** that is an acoustic resonator, and the optical cavity **203** is disposed to measure the acoustic field at the location of the optical cavity in the resonator. In an embodiment, the acoustic field **204** is created in acoustic enclosure **210** that is an acoustic cavity with dimensions that are short compared to the wavelength of the highest acoustic frequency of interest, and the optical cavity is disposed to measure the acoustic field in the acoustic cavity.

[0064] In an embodiment the acoustic field **204** is created in an acoustic enclosure **210** such as a room, that has irregular boundaries and the boundaries of which may not be fully known or defined, and the optical cavity is disposed to measure the acoustic field in the in the acoustic enclosure. The shape and size of such an acoustic enclosure can be arbitrary and may not be known.

[0065] In an embodiment, the acoustic field **204** exists in an arbitrary environment which may not have any defined boundaries and which as such may be described as an open environment, and the optical cavity **203** is disposed to measure the acoustic field at the location of the optical cavity in the arbitrary environment.

[0066] In an embodiment, sound source driver **211** drives sound source **206** to produce acoustic field **204** that is used to modulate the index of refraction of the acoustic medium **205** inside the optical cavity **203**. The sound source driver **211** controls sound source **206** to produce a selected range of acoustic frequencies and intensities. The output level of the sound source **206** can be controlled by driver signal **218** that is applied to sound source **206** from sound source driver **211**. The driver signal **218** controls the amplitude and frequency of the acoustic field **204** that the sound source **206** generates. The voltage of driver signal **218** that is applied to the sound source **206** can determine current that flows through the sound source **206** or power that is dissipated by the sound source **206**. The sound source driver **211** can be a computer or operated by a computer or on-board operating instructions. The sound source driver **211** can be a function generator that can generate a variety of waveforms, including sine waves, square waves, and triangular waves. The function generator can be set to generate a sine wave with the desired frequency and amplitude. The sound source driver **211** can be a microcontroller that can be programmed to generate a waveform with the desired frequency and amplitude.

[0067] The driver signal **218** is the signal that is used to drive sound source **206**. The driver signal **218** can be a sinusoidal signal with a frequency that is selected to be within the bandwidth of sound source **206**. The amplitude of the driver signal **218** can be adjusted to control the power of sound source **206**. The driver signal **218** can be generated using a variety of methods or devices, including a function generator. The driver signal **218** can be a digital signal or an analog signal. The type of signal used can depend on the type of sound source **206** that is being used. The driver signal **218** can be a single-ended signal. However, it can also be a differential signal. The driver signal **218** can be a voltage signal or a current signal. The type of signal used can depend on the type of sound source **206** that is being used. The driver signal **218** can be a unipolar signal or a bipolar signal that depends on the type of sound source **206** that is being used. The driver signal **218** can be a positive-going signal or a negative-going signal. The driver signal **218** can be a continuous signal or a pulsed signal. The driver signal **218** can be a symmetrical signal or an asymmetrical signal. The driver signal **218** can be a linear signal or a nonlinear signal.

[0068] The optical cavity **203** of the sound pressure metrology instrument **200** allows the instrument to determine sound pressure by measuring the index of refraction of acoustic medium **205**. The optical cavity **203** can be a resonant cavity that includes two parallel mirrors. The distance between the mirrors can be precisely controlled, and the cavity can be filled with acoustic medium **205**. When acoustic field **204** is present in acoustic medium **205**, it causes the index of refraction of acoustic medium **205** to vary. This variation in the index of refraction is detected by optical cavity **203**, which produces acoustic-modified light **215** from source light **214** that is functionally dependent on the sound pressure. The optical cavity **203** can have more than two mirrors, arranged to form an optical ring resonator. The optical cavity **203** can have no discrete mirrors but instead guide the light by internal reflection at a material interface or from a reflection by a pattern of holes or other refractive index variations in a solid structure. The optical cavity **203** can be a solid state optical cavity that interacts with the acoustic medium via the evanescent part of the cavity light. A solid state optical cavity can be a photonic crystal cavity, an optical fiber cavity, a continuous total internal reflection resonator, a discrete total internal reflection resonator, or a waveguide structure.

[0069] The optical cavity **203** provides a sensitive and accurate way to measure the index of refraction of acoustic medium **205**. Coatings and materials used for optical cavity **203** can be selected for operation with laser wavelengths for source light **214** and acoustic-modified light **215**.

[0070] In an embodiment, optical cavity **203** is a prismatic structure (e.g. a cylinder, rectangular prism and the like) that can include optical material and supporting mechanical structures, e.g., glass, metal, and the like. The length of optical cavity **203** can be on the order of centimeters, and the diameter of the cavity can be on the order of millimeters although size is arbitrary and can be sized for the particular implementation. The mirrors of optical cavity **203** can be made of highly reflective material at the wavelength of source light **214** and acoustic-modified light **215**.

[0071] The optical cavity can be filled with or disposed in acoustic medium **205**, which can be a gas or liquid.

[0072] The output signal of the optical cavity can be proportional to the sound pressure. The range of outputs that can be measured by the optical cavity can depend on the sensitivity of the optical cavity and the amplitude of acoustic field **204**. The sound pressure can have values ranging from −20 dB to 200 dB, and the optical cavity can be used to measure sound pressure levels over this entire range or a narrower range.

[0073] The optical cavity **203** can be operated by sending source light **214** into optical cavity **203**. The light circulates in the optical cavity, and the index of refraction of the acoustic medium causes the light to be refracted. The amount of refraction can be proportional to the sound pressure, and this can be detected by measuring acoustic-modified light **215** produced from source light **214**.

[0074] The optical cavity can be operated at a constant mean temperature and mean pressure so that the mean index of refraction of the acoustic medium is stable.

[0075] There are a variety optical cavity **203** that can be used to measure sound pressure level, including a Fabry-Perot cavity. The Fabry-Perot cavity is a resonant cavity that includes two parallel mirrors. Another type of optical cavity **203** is the ring cavity that includes mirrors arranged so that light waves travel around the ring in a continuous loop. The optical cavity **203** can have no discrete mirrors but instead guide the light by internal reflection at a material interface or from a reflection by a pattern of holes or other refractive index variations in a solid structure. The optical cavity **203** can be a solid state optical cavity that interacts with the acoustic medium via the evanescent part of the cavity light. A solid state optical cavity can be a photonic crystal cavity, an optical fiber cavity, a continuous total internal reflection resonator, a discrete total internal reflection resonator, or a waveguide structure.

[0076] In an embodiment, optical cavity **203** is constructed in a small and portable form factor that can be used as an intrinsically traceable microphone in arbitrary acoustic environments. Intrinsically traceable refers to configuration wherein that the microphone does not require calibration in order to give accurate measurement results in SI units, or equivalently in any system of physical units with defined conversion coefficients to SI units.

[0077] It is contemplated that the sensitivity of measurement of the refractive index can be enhanced when optical cavity **203** is a high-finesse optical cavity, wherein high-finesse optical cavity refers to an optical structure in which reflection of light at one or more interfaces produces interference such that the variation of relative transmitted intensity with optical frequency is steeper than a sinusoidal variation.

[0078] In an embodiment, with reference to FIG. **6**, optical cavity **203** functions as a microphone, wherein light is coupled into an optical cavity that is open to its fluid environment. The optical cavity **203** can include additional cavities to cancel dimensional variation or other effects. The microphone provides primary measurement of the local sound level, such that the microphone is intrinsically traceable. This measurement can be used to calibrate other devices such as sound sources and microphones.

[0079] The acoustic medium **205** is a substance that supports an acoustic field and is used to couple the acoustic field **204** produced by the sound source **206** to the source light **214** in the optical cavity **203**. The acoustic medium **205** can have a high derivative of index of refraction with respect to density so that the acoustic field **204** can couple efficiently to the source light **214**. The acoustic medium **205** can also be transparent to the source light **214** so that the source light **214** can propagate through the acoustic medium **205** without being absorbed. The acoustic medium and other materials, including optical cavity **203**, through which light is passing can be made of a material that is transparent to the light.

[0080] The acoustic medium **205** can include a variety of materials, including gases, liquids, and solids. The acoustic medium **205** can also be made of a composite material, such as a gas-liquid mixture or a solid-liquid mixture. The acoustic medium **205** can support acoustic pressures in the range of acoustic field **204**. The acoustic medium **205** supports operation at a selected mean temperature and mean pressure.

[0081] In an embodiment, with reference to FIG. **3**, the sound pressure metrology instrument **200** can be used to calibrate a microphone **212**. Microphone signal **219** is a signal that is generated by microphone **212** in response to acoustic field **204** and can take a variety of forms such as an electrical voltage signal, an electrical current signal, or an optical signal. Microphone signal **219** is commonly proportional to a property of acoustic medium **204** for example the acoustic pressure or the acoustic particle velocity. By measuring the sound pressure at the location of optical cavity **203** and recording the corresponding value of the microphone signal **219** the sound pressure metrology instrument **200** can calibrate the output of microphone **212** with respect to the properties of the acoustic field **204** at the location of the optical cavity **203**, at the location of the microphone **212**, or at another location. This calibration allows the microphone **212** to measure sound in terms of SI traceable physical units. The calibration can include information about the amplitude of the response of the microphone to sound, or information about the time delay or phase of the response of the microphone to sound. The response of the microphone to sound may be linear, in which case the calibration can be represented as a sensitivity coefficient. The sensitivity coefficient may depend on the acoustic frequency. The sensitivity coefficient may be complex so as to represent both amplitude and phase information.

[0082] Microphone **212** can be disposed in the acoustic field **204**. The microphone signal **219** can be sent to a preamplifier, oscilloscope, or analyzer module **208**. The acoustic field **204** is applied to the microphone **212**, and the microphone signal **219** is displayed on the oscilloscope or subject to analysis in combination with acoustic-modified signal **216** by analyzer module **208**.

[0083] The optional acoustic enclosure **210** of the sound pressure metrology instrument **200** is a housing that encloses the acoustic field **204**. The acoustic enclosure **210** is made of a material that is largely acoustically opaque to acoustic field **204** produced by sound source **206**.

[0084] The acoustic enclosure **210** can be made of various materials such as metal, wood, ceramic, glass, plastic, and the like. The thickness of the acoustic enclosure **210** can be on the order of a few millimeters or centimeters. The acoustic enclosure **210** may also be made of a porous material, such as a foam or a felt. Porous materials can be used in acoustic enclosures to reduce the amount of acoustic energy that is reflected back into the optical cavity **203**, back to sound source **206**, or back to microphone **212**. The acoustic enclosure can be made of a combination of different materials. The acoustic enclosure **210** can be of a variety of shapes which may be regular such as a cylinder or rectangular prism, or which may be irregular. The dimensions of the acoustic enclosure **210** can be chosen to optimize the performance of the sound pressure metrology instrument **200**. For example, the dimensions of the acoustic enclosure **210** can be chosen to maximize the interaction between the acoustic field **204** and the source light **214**.

[0085] The acoustic enclosure **210** can allow acoustic field **204** to be produced by the sound source **206** in a direction that is at a selected angle, e.g., perpendicular or at an oblique, to the optical cavity **203**. This allows the acoustic field **204** to interact with source light **214** in a geometry that increases the effect on the acoustic-modified light **215** of the modulations in the index of refraction of the acoustic medium **205** inside the optical cavity **203**.

[0086] In an embodiment, with reference to FIG. **4**, the acoustic resonator is an acoustic enclosure with dimensions such that standing sound waves are supported at chosen frequencies. Such a standing wave establishes a relation between the sound level at the location of the optical cavity and the location of the acoustic device under test. The resonator could be made variable in dimension (e.g. length), such that the supported acoustic resonance frequencies are continuously tunable. A fixed-length resonator of length L can be used to support standing acoustic plane waves at acoustic wavelengths λ_{ac}=UN where N is an integer. Plane means that the acoustic wavefronts are flat or nearly flat.

[0087] In an embodiment, with reference to FIG. **5**, the acoustic coupler is an acoustic enclosure with dimensions sufficiently small such that there is not much difference between the sound level at the location of the optical cavity and the location of the acoustic device under test, regardless of their relative positions in or on the acoustic enclosure. The difference can be sufficiently small as to be negligible or can be corrected by an accurate acoustic model of the enclosure. Here, there can be a uniform acoustic field with $L<<\lambda_{ac}$.

[0088] In an embodiment, with reference to FIG. **3**., a microphone receiver **213** can be used in conjunction with a microphone **212**.The microphone receiver **213** in combination with microphone **212** converts acoustic energy into an output that is typically electrical. The microphone receiver **213** can output a range of electrical signals, depending on the strength of the acoustic energy that is incident on the device. The output signal of the microphone receiver **213** can be proportional to the sound pressure of the acoustic energy. The microphone receiver **213** can be operated in a wide range of temperatures and humidity conditions. It can be operated in a variety of acoustic environments, including noisy environments and environments with reverberation. The output signal of microphone receiver **213** can be of a non-electrical nature, for instance optical. The output of microphone receiver **213** can be analog or digital,

[0089] The acoustic signal **221** is a signal that is produced by microphone receiver **213** in response to the acoustic field **204** produced by the sound source **206**. The acoustic signal **221** is a measure of the sound pressure of the acoustic field **204**. The acoustic signal **221** can be a time-varying signal that has a frequency spectrum that can be centered around the frequency of the acoustic field **204**. The acoustic signal **221** can be analog or digital in nature. The amplitude of the acoustic signal **221** can be proportional to the sound pressure of the acoustic field **204**.

[0090] In an embodiment, the sound pressure metrology instrument **200** can include a supplemental sensor **209**. The supplemental sensor **209** can measure one or more properties of the acoustic medium such as a temperature, humidity, static background pressure, or composition of the acoustic medium **205** in the optical cavity **203**; or one or more properties of the source light **214** or the acoustic-modified light **215** such as the optical frequency or wavelength; or one or more properties of the optical cavity **203** such as motion of the optical cavity mirrors; or one or more properties of the acoustic enclosure **210** such as temperature or motion of the acoustic enclosure surfaces. The supplemental sensor **209** can be any type of sensor that can measure one or more of these parameters. Some examples of supplemental sensors include temperature sensors, humidity sensors, pressure sensors, mass spectrometers, chromatographs, and wavemeters. The supplemental sensor **209** can be located in close proximity to the optical cavity **203** in order to minimize the effects of environmental variations on the measurements. The supplemental sensor **209** can be housed in a protective enclosure to protect it from the environment. The supplemental sensor **209** can be composed of several similar or different sensors, which may be located together or be distributed across different positions.

[0091] The supplemental sensor **209** can be connected to the analyzer module **208** via a wired or wireless connection. The supplemental sensor **209** transmits the measured values to the analyzer module **208**, which incorporates the measured values in the determination of the sound pressure level. The supplemental sensor **209** can be calibrated to a known value in order to ensure accurate measurements. The calibration process can involve exposing the supplemental sensor **209** to a known value of each parameter being measured and then adjusting the sensor to read that value.

[0092] The supplemental sensor **209** can be used to improve the accuracy of the sound pressure measurements that are determined in analyzer module **208** by compensating for environmental variations and other variations. By measuring and correcting for these variations, the supplemental sensor **209** can improve the accuracy of the measurements of the sound pressure.

[0093] The range of supplemental sensor signal **217** output by supplemental sensor **209** depends on the type of sensor. For example, a temperature sensor may have a range of outputs from −50° C. to 150° C., while a humidity sensor may have a range of outputs from 0% to 100% RH. The operating parameters of the supplemental sensor **209** can depend on the type of sensor.

[0094] The operation and construction of the supplemental sensor **209** depends on the type of sensor. For example, a temperature sensor can be operated by connecting it to a power supply and then placing it in the environment where the temperature is to be measured. A humidity sensor can be operated by connecting it to a power supply and then placing it in the environment where the humidity is to be measured.

[0095] Temperature sensors can measure the temperature of the acoustic medium **205** in the optical cavity **203**. This information is used to correct for any variations in the pressure derivative of the index of refraction of the acoustic medium **205** that can be caused by changes in temperature. Humidity sensors measure the humidity of the acoustic medium **205** in the optical cavity **203**. This information is used to correct for any variations in the pressure derivative of the index of refraction of the acoustic medium **205** that can be caused by changes in humidity. Pressure sensors measure the mean of the acoustic medium **205** in the optical cavity **203**. This information is used to correct for any variations in the pressure derivative of the index of refraction of the acoustic medium **205** that can be caused by changes in mean pressure. Mass spectrometers measure the composition of the acoustic medium **205** in the optical cavity **203**. This information is used to correct for any variations in the pressure derivative of the index of refraction of the acoustic medium **205** that can be caused by changes in the composition of the medium. Chromatographs measure the concentration of different components in the acoustic medium **205** in the optical cavity **203**. This information is used to correct for any variations in the pressure derivative of the index of refraction of the acoustic medium **205** that can be caused by changes in the concentration of the components. Wavemeters measure the optical frequency or

wavelength of the source light **214** or the acoustic-modified light **215**. This information is used to correct for any variations in the pressure derivative of the index of refraction of the acoustic medium **205** that can be caused by changes in the optical frequency or wavelength of the light.

[0096] The supplemental sensor signal **217** is produced by supplemental sensor **209** and communicated to analyzer module **208**. The supplemental sensor signal **217** is used to correct for any variations in the acoustic medium **205**, source light **214**, acoustic-modified light **215**, optical cavity **203**, or acoustic enclosure **210** that affects accuracy of the sound pressure measurement. The supplemental sensor signal **217** can be a voltage, current, or frequency signal. The range of outputs of the supplemental sensor signal **217** can depend on the type of supplemental sensor **209** used. The operating parameters of the supplemental sensor signal **217** can also depend on the type of supplemental sensor **209** used. The supplemental sensor signal **217** can be analog or digital in nature. The supplemental sensor signal **217** can be communicated to the analyzer module **208** using a wired connection. However, it is also possible to communicate the supplemental sensor signal **217** using a wireless connection.

[0097] The photodetector **207** converts light energy of acoustic-modified light **215** into electrical energy and detects acoustic-modified light **215** produced by the optical cavity **203** in response to the acoustic field **204** from the sound source **206**. The photodetector **207** produces an acoustic-modified signal **216** from the acoustic-modified light **215**, which is then communicated to the analyzer module **208**. The photodetector **207** can be selected and designed to ensure that it is sensitive to the acoustic-modified light **215** and that it produces a high-quality acoustic-modified signal **216**.

[0098] The photodetector **207** can be a semiconductor device that is made of a material that is sensitive to light. An exemplary photodetector is a photodiode. A photodiode is a semiconductor device that has a p-n junction. When light strikes the p-n junction, it creates an electron-hole pair. The electrons and holes are separated by the electric field at the p-n junction, and this creates a current flow. The current flow is proportional to the intensity of the light, so the photodiode can be used to detect the intensity of the acoustic-modified light **215**. The photodetector **207** can be mounted on a printed circuit board (PCB). The PCB can be connected to the analyzer module **208**, which processes the acoustic-modified signal **216** to determine the sound pressure level of the acoustic field **204**.

[0099] The acoustic-modified signal **216** is produced by photodetector **207** in response to the acoustic-modified light **215**. The acoustic-modified light **215** is produced by the optical cavity **203** in response to the interaction of the source light **214** with the acoustic field **204**. The acoustic-modified signal **216** encodes the modulations in the index of refraction of the acoustic medium **205** inside the optical cavity **203** due to the acoustic field **204**.

[0100] The acoustic-modified signal **216** can be a complex signal that contains both amplitude and phase information. In an embodiment, the amplitude of the acoustic-modified signal **216** is proportional to the magnitude of the modulations in the index of refraction of the acoustic medium **205** inside the optical cavity **203**., and the phase of the acoustic-modified signal **216** is proportional to the phase of the modulations in the index of refraction of the acoustic medium **205** inside the optical cavity **203**.

[0101] The acoustic-modified signal **216** can be in the range of 10 mV to 10 V. The frequency of the acoustic-modified signal **216** can be in the range of 0.001 Hz to 100 GHz.

[0102] The acoustic-modified signal **216** can be used to measure the sound pressure of a wide range of acoustic fields. The sound pressure of an acoustic field can be determined by measuring the frequency, phase or amplitude of the acoustic-modified signal **216**.

[0103] The analyzer module **208** of the sound pressure metrology instrument **200** determines the sound pressure of the acoustic field **204** produced by the sound source **206** from the modulations in the index of refraction of the acoustic medium **205** inside the optical cavity **203** encoded in the acoustic-modified light **215**. The analyzer module **208** can include various signal modification, transformation and processing components such as signal mixers, signal splitters, digital signal processors, amplifiers, attenuators, oscillators, frequency counters, time interval analyzers, integrators, differentiators, spectrum analyzers, and the like. The analyzer module **208** can include a processor **217**, a memory **218**, and an input/output (I/O) interface **219**. The processor **217** is configured to execute instructions stored in the memory **218** to determine the sound pressure level of the acoustic field **204**. The I/O interface **219** is configured to receive the acoustic-modified signal **216** from the photodetector **207** and to output the sound pressure of the acoustic field **204**. In an embodiment the I/O interface does not directly output the sound pressure but outputs a one or more quantities or signals from which the user can readily determine the sound pressure level without having performed a calibration of sound pressure metrology instrument **200**.

[0104] The processor **217** can be any type of processor suitable for executing instructions. For example, the processor **217** can be a general-purpose microprocessor, a digital signal processor (DSP), or a field-programmable gate array (FPGA). The memory **218** can be any type of memory suitable for storing instructions and data. For example, the memory **218** can be a random-access memory (RAM), a read-only memory (ROM), or a flash memory. The I/O interface **219** can be any type of interface suitable for receiving the acoustic-modified signal **216** and outputting the sound pressure of the acoustic field **204**. For example, the I/O interface **219** can be an analog electrical input, a serial interface, a parallel interface, a network interface, or removable media.

[0105] The analyzer module **208** can be implemented in any suitable manner. For example, the analyzer module **208** can be implemented as a single integrated circuit, or it can be implemented as a plurality of interconnected integrated circuits. The analyzer module **208** may also be implemented in whole or in part as a software program running on a general-purpose computer. The analyzer module **208** may encompass a variety of separate signal modification, transformation and processing instruments and components.

[0106] The analyzer module **208** can be configured to output the sound pressure in a variety of units, such as decibels (dB), pascals (Pa), or newtons per square meter (N/m^2). The analyzer module **208** may also be configured to output the sound pressure in a variety of frequency ranges, such as the audible range (20 Hz to 20 kHz), the infrasonic range (less than 20 Hz), or the ultrasonic range (greater than 20 kHz). The analyzer module **208** is capable of determining sound pressures in a wide range of values, typically from 0

dB to 160 dB. The analyzer module **208**l may also be configured to determine sound pressures in a specific frequency range, such as the audible range (20 Hz to 20 kHz).

[0107] Various perturbations of the components of sound pressure metrology instrument **200** are contemplated. The acoustic environment can be a resonator, cavity, or open (e.g., as in an optical microphone). The acoustic-modified signal **216** and from thence the changes in acoustic modified light **215** from source light **214** can be observed by using a lock (e.g., Pound-Drever-Hall lock, side-of-fringe transmission lock, side-of-fringe reflection lock, dither lock, dual sideband lock, and the like), an optical frequency comb, and the like. The resonant frequency shift of optical cavity **203** can be determined from an applied frequency shift applied to source light **214** and measured by a frequency counter, a voltage proportional to a frequency shift applied to source light **214** and measured by a voltage measuring device, a beat of source light **214** against an optical reference of stable frequency, and the like. The method of establishing SI traceability can include using accurately known properties (especially pressure derivative of the refractive index under the applicable thermodynamic boundary conditions) of air used as the acoustic medium **204**, of nitrogen used as the acoustic medium **205**, of helium used as the acoustic medium **205**, and the like. The geometry of optical cavity **203** can include a Fabry-Perot cavity, ring cavity, whispering gallery resonator, or photonic crystal, and the like.

[0108] The addition of an acoustic resonator can provide disposal of an optical cavity **203** and microphone to be calibrated **212** at locations in acoustic medium **205** to experience the same sound pressure. The acoustic resonator can amplify the magnitude of the sound pressure to improve the signal-to-noise ratio of the measurement.

[0109] The optical cavity **203** can function as a microphone (e.g., can be miniature, portable, sufficiently robust, and the like) that is intrinsically traceable (i.e., would not require calibration) and can calibrate other microphones in a variety of measurement settings. With helium as acoustic medium **205** in optical cavity **203**, the relationship between sound pressure can be based on ab initio atomic calculations so that the sound pressure measurements of sound pressure metrology instrument **200** are traceable to a quantum standard. The properties (especially pressure derivative of the refractive index under the applicable thermodynamic boundary conditions) of an acoustic medium **205** other than helium may also be determined by ab initio calculations or by experimental comparison the properties of helium, in either case making the sound pressure measurements of sound pressure metrology instrument **200** traceable to a quantum standard.

[0110] It should be appreciated that various component configurations can occur in sound pressure metrology instrument **200**, as shown in FIG. **8**, FIG. **9**, FIG. **10**, FIG. **11**, and FIG. **12**. With reference to FIG. **9**, sound pressure metrology instrument **200** includes a lock-based readout using sideband reflection lock to measure the modulation of the optical frequency resonance. Here, a phase modulator is used to generate sidebands which are separated from the laser carrier by a tunable frequency difference. The Pound-Drever-Hall (PDH) method is used to lock one of these sidebands to the optical cavity mode and the motion of the sideband is measured by a gated frequency counter. The optical light is generated by a tunable laser (**1**) and is transmitted to some beam shaping optics (**2**, e.g., a lens) to match the shape of the beam to a mode of the optical cavity. Light is modulated by a phase modulator (**3**) and sent via an optical circulator (**4**) to the optical cavity (**5**). A portion of the light is reflected from the cavity and returns to the optical circulator (**4**). The circulator directs this portion of the light to a photodetector (**6**). The electrical signal from the photodetector is sent to a radiofrequency (RF) mixer (**8**), via an optional amplifier (**7**). An RF frequency source (**9**) generates a constant frequency signal, called the modulation frequency (**18**) and communicates it electronically to a RF splitter (**10**) so that the modulation frequency can be sent to two different paths. The first path goes to a tunable phase delay (**11**) and then the RF mixer (**8**). The other path is incident on another RF splitter (**10**) where it is combined with another signal and sent to the phase modulator (**3**). A voltage controlled oscillator (VCO) (**12**) generates a second signal, called the sideband frequency (**19**). This sideband frequency is tunable based on the input voltage to the VCO and is larger than the modulation frequency. The sideband frequency is sent to another RF splitter (**10**). One output of the splitter is sent to another RF splitter (**10**) where it is combined with the modulation frequency and sent to the phase modulator (**3**). The other output of the splitter is sent to a gated frequency counter (**14**). The output of the RF mixer (**8**) is referred to as the PDH error signal (**17**) and is sent to a servo controller (**13**). The output of the servo controller is sent to the VCO (**12**) in order to lock one of the sidebands to a resonance of the optical cavity. In addition, the output of the servo controller could be sent to a low pass filter (**15**) and second servo controller (**13**) which operates at a speed much slower than the lowest acoustic frequency of interest. This second servo sends a signal to the laser (**1**) to keep the output of the first servo (**13**) centered and cancel long term drifts that can cause the system to run out of dynamic range and break lock. The frequency counter output is sent to an analyzer (**16**).

[0111] With reference to FIG. **10**, sound pressure metrology instrument **200** includes a lock-based readout with a reference laser. Here, the modulation of the optical frequency resonance is measured, wherein one laser (probe laser) is frequency locked to the optical cavity mode, and the beat note between the probe laser and a second laser (reference laser) is measured by a gated frequency counter. The optical light is generated by a tunable laser (**1**, probe laser) and is split into two different arms by a beam splitter (**20**). One arm transmits to some beam shaping optics (**2**, e.g., one or several lenses) to match the shape of the beam to a mode of the optical cavity. The light is modulated by a phase modulator (**3**) and sent via an optical circulator (**4**) to the optical cavity (**5**). A portion of the light is reflected from the cavity and returns to the optical circulator (**4**). The circulator directs this portion of the light to a photodetector (**6**). The electrical signal from the photodetector is sent to a radiofrequency (RF) mixer (**8**) via an optional amplifier (**7**). An RF frequency source (**9**) generates a constant frequency signal that is sent to an RF splitter (**10**) so that the modulation frequency can be sent to two different paths. The first path goes to a tunable phase delay (**11**) and then the RF mixer (**8**). The other path is sent to the phase modulator (**3**). The output of the RF mixer (**8**) is known as the PDH error signal (**17**) and is sent to a servo controller (**13**). The output of the servo controller is sent to the probe laser (**1**) to lock its optical frequency to a resonance of the optical cavity. A second laser (**21**, reference laser) also generates light. This laser is chosen to be highly stable at the acoustic frequencies

of interest and is tuned to an optical frequency that is close to that of the probe laser. The light from the reference laser and one arm of the probe laser are combined on a beam splitter (**2**) and communicated optically to an additional photodetector (**6**). This output of this photodetector is optionally amplified (**7**) and send to a gated frequency counter (**14**). The frequency counter output is sent to an analyzer (**16**).

[0112] With reference to FIG. **11**, sound pressure metrology instrument **200** includes an optical comb-based readout. Here, the modulation of the optical frequency resonance is measured, wherein an electro-optic phase modulator is used to generate a narrow optical frequency comb. The comb is used to perform rapid spectroscopy readout of the optical cavity spectrum. The optical light is generated by a tunable laser (**1**) and is split into two different arms by a beam splitter (**20**). One arm transmits to some beam shaping optics (**2**, e.g., a lens) to match the shape of the beam to a mode of the optical cavity. The light is modulated by a phase modulator (**3**). The phase modulator is driven by an RF comb generator (**23**) (e.g., an RF frequency source that drives a repeating set of frequency chirps) and in turn generates an optical frequency comb. This comb is sent via an optical circulator (**4**) to the optical cavity (**5**). A portion of the light is reflected from the cavity and returns to the optical circulator (**4**). The second optical arm is sent to an acousto-optic frequency shifter (**22**). The frequency shifter is driven at a constant RF frequency by a frequency generator (**25**). The two optical arms are combined on a second beam splitter (**20**) and sent to a photodetector (**6**). The electrical signal from the photodetector is sent to a digitizer (**24**) via an optional amplifier (**7**).

[0113] Sound pressure metrology instrument **200** can be made in various ways. It can be appreciated that sound pressure metrology instrument **200** includes a number of optical, electrical, or mechanical components, wherein such components can be interconnected and placed in communication (e.g., optical communication, electrical communication, mechanical communication, and the like) by physical, chemical, optical, or free-space interconnects. The components can be disposed on mounts that can be disposed on a bulkhead for alignment or physical compartmentalization. As a result, sound pressure metrology instrument **200** can be disposed in a terrestrial environment or space environment. Components of sound pressure metrology instrument **200** can be formed from silicon, silicon nitride, and the like although other suitable materials, such ceramic, glass, or metal can be used. According to an embodiment, the components of sound pressure metrology instrument **200** are formed using 3D printing although the components of sound pressure metrology instrument **200** can be formed using other methods, such as injection molding or machining a stock material such as block of material that is subjected to removal of material such as by cutting, laser oblation, and the like. Accordingly, sound pressure metrology instrument **200** can be made by additive or subtractive manufacturing. In an embodiment, components of sound pressure metrology instrument **200** are selectively etched to remove various different materials using different etchants and photolithographic masks and procedures. The various layers thus formed can be subjected to joining by bonding to form sound pressure metrology instrument **200** or elements thereof.

[0114] The materials and components for the sound pressure metrology instrument **200** can be selected based on the desired performance characteristics of the instrument. For example, the light source **201** can be selected to produce light of a wavelength that is strongly affected by the acoustic medium **205**. The optical cavity **203** can be made of a material with a high mechanical stiffness so that it undergoes minimal mechanical deformation during operation of acoustic metrology instrument **200**. The photodetector **207** can be sensitive to the wavelength of light produced by the light source **201**. The sound pressure metrology instrument **200** can be assembled using a variety of methods, such as soldering, welding, or adhesive bonding. The specific assembly method used can depend on the materials and components of the instrument.

[0115] Sound pressure metrology instrument **200** does not require calibration (by comparison of an output of it to an independent measurement of the sound pressure, such as by a calibrated microphone) before use since the sound pressure is determined in the analyzer module **208** in a primary manner. However, components of the sound pressure metrology instrument that measure various quantities (e.g., temperature, wavelength, frequency, voltage, humidity, and the like) that enter into determination of sound pressure metrology instrument can be calibrated.

[0116] The following processing conditions and parameters can be used to guide construction of the sound pressure metrology instrument **200**. The light source **201** can be operated at a power level that is sufficient to produce a strong signal at the photodetector **207**. The optical cavity **203** can be designed to have a high Q factor the light within it interacts strongly with the acoustic medium **205**. The photodetector **207** can have an applied bias voltage that is sufficient to produce a high output signal.

[0117] Sound pressure metrology instrument **200** has numerous advantageous and unexpected benefits and uses. In an embodiment, a process for determining sound pressure from index of refraction with sound pressure metrology instrument **200** includes: receiving, by optical cavity **203** disposed in acoustic medium **205**, acoustic field **204** from sound source **206**; receiving, by optical cavity **203**, source light **214** from light source **201**; interacting source light **214** with acoustic field **204** in optical cavity **203**; producing acoustic-modified light **215** from source light **214** in response to interacting with acoustic field **204**, such that acoustic-modified light **215** encodes modulations in the index of refraction of acoustic medium **205** inside optical cavity **203** due to acoustic field **204**; communicating acoustic-modified light **215** signal to photodetector **207**; receiving acoustic-modified light **215** by photodetector **207**; producing, by photodetector **207**, acoustic-modified signal **216** from acoustic-modified light **215**; communicating acoustic-modified signal **216** from photodetector **207** to analyzer module **208**; and determining, by analyzer module **208**, the sound pressureof acoustic field **204** from the modulations in the index of refraction of acoustic medium **205** encoded inside optical cavity **203** in the acoustic-modified light **215**. In an an embodiment, determining sound pressure from index of refraction includes receiving supplemental sensor signal **217** from supplemental sensor **209**; and using supplemental sensor signal **217** to improve the fidelity of the determination of the sound pressure.

[0118] In an embodiment, analyzer module **208** determines the sound pressure from the index of refraction based on the following equation:

$$\Delta p = \Delta n\left(\frac{dn}{dp}\right)_X^{-1}$$

wherein X is a thermodynamic boundary condition on the derivative and is adiabatic, isothermal, or polytropic; n is index of refraction of acoustic medium; and p is sound pressure.

[0119] In an an embodiment, determining sound pressure from index of refraction includes controlling production of the acoustic field by the sound source **206** by a sound source driver **211**.

[0120] In an an embodiment, measurement of refractive index amplitude occurs by making many brief refractive index measurements, with a repetition rate faster than twice the highest acoustic frequency of interest. In an embodiment, measurement of refractive index amplitude occurs by making many brief refractive index measurements, with a repetition rate that is not faster than twice the highest acoustic frequency of interest, and in which aliasing is accounted for.

[0121] In an embodiment, the refractive index shift is measured by measuring the resonance frequency shift of a mode of the optical cavity **203**. In an embodiment, the refractive index shift is measured by measuring the resonance frequency shift of more than one mode of the optical cavity **203**. In an embodiment, the resonance frequency shift is measured by servo-locking the frequency of laser light to the cavity resonance frequency and measuring the frequency shift applied to the laser light or the error signal of the servo loop. In an embodiment, the frequency shift applied to the laser light is measured by measuring the beat frequency between the laser light and reference laser light on a photodiode. In an embodiment, the reference laser light is produced by an independent laser source than that supplying the laser light that is servo-locked to the optical cavity. In an embodiment, the reference laser light is obtained from the same laser source that is servo-locked to the optical cavity, the reference laser light being extracted from this source at a point in the optical chain prior to the application of the frequency shift.

[0122] In an embodiment, the frequency shift applied to the laser light is measured by measuring the voltage applied to a voltage-controlled oscillator. In an embodiment, the servo lock is implemented by detecting a minimum in the amplitude of light reflected from the cavity. In an embodiment, the servo lock is implemented by detecting a maximum in the amplitude of light transmitted by the cavity.

[0123] In an embodiment, the resonance frequency shift is measured by measuring the minimum in reflection from the optical cavity of broadband light or a comb of laser lines. In an embodiment, the resonance frequency shift is measured by measuring the maximum in transmission of broadband light or a comb of laser lines.

[0124] In determining the sound pressure from the index of refraction analyzer module **208** can determine the sound pressure from the index of refraction based on the following equation:

$$\Delta p = \Delta n\left(\frac{dn}{dp}\right)_X^{-1}$$

wherein X is a condition on the derivative and is adiabatic, isothermal, or polytropic; n is index of refraction of acoustic medium; and p is sound pressure. Whether the conditions on the derivative is adiabatic, isothermal, or polytropic depends on the acoustic frequency and the resonator dimensions and materials. For the adiabatic case, the virial Lorentz-Lorenz relation is

$$\frac{n^2-1}{n^2+1} = A_R\rho_v\left(1 + B_R(T)\rho_v + C_R(T)\rho_v^2 + \dots\right) \approx A_R^*\rho_v$$

wherein ρ_v is the number density of the gas, A_R is the molecular polarizability, B_R and C_R are the refractivity virial coefficients, and A^*_R is the effective molecular polarizability. From the virial Lorentz-Lorenz relation thus written, the derivative of index of refraction n with respect to number density is

$$\frac{dn}{d\rho_v} \approx \frac{\left(n^2+2\right)^2}{6n}\left(A_R^* + \rho_v\frac{dA_R^*}{d\rho_v}\right).$$

The chain rule provides

$$\left.\frac{dn}{dp}\right|_A = \frac{dn}{d\rho_v} \times \left.\frac{d\rho}{dp}\right|_A \times \frac{\rho_v}{\rho} = \left(\frac{dn}{d\rho_v}\right)\frac{1}{v_0^2\mathcal{M}}$$

wherein ρ is the mass density of the fluid, v_0 is the sound speed of the fluid, and M is the molecular weight of the fluid. Accordingly, the sound speed is determined from measurements of the gas pressure and temperature, and using gas property data, or it can be provided by measuring acoustic resonance frequencies of the acoustic enclosure.

[0125] It is contemplated that analyzer module **208** in sound pressure metrology instrument **200** and determining therein sound pressure from index of refraction can include the properties, functionality, hardware, and process steps described herein and embodied in any of the following non-exhaustive list:

[0126] a process (e.g., a computer-implemented method including various steps; or a method carried out by a computer including various steps);

[0127] an apparatus, device, or system (e.g., a data processing apparatus, device, or system including means for carrying out such various steps of the process; a data processing apparatus, device, or system including means for carrying out various steps; a data processing apparatus, device, or system including a processor adapted to or configured to perform such various steps of the process);

[0128] a computer program product (e.g., a computer program product including instructions which, when the program is executed by a computer, cause the computer to carry out such various steps of the process; a computer program product including instructions which, when the program is executed by a computer, cause the computer to carry out various steps);

[0129] computer-readable storage medium or data carrier (e.g., a computer-readable storage medium including instructions which, when executed by a computer, cause the computer to carry out such various steps of

the process; a computer-readable storage medium including instructions which, when executed by a computer, cause the computer to carry out various steps; a computer-readable data carrier having stored thereon the computer program product; a data carrier signal carrying the computer program product);

[0130] a computer program product including comprising instructions which, when the program is executed by a first computer, cause the first computer to encode data by performing certain steps and to transmit the encoded data to a second computer; or

[0131] a computer program product including instructions which, when the program is executed by a second computer, cause the second computer to receive encoded data from a first computer and decode the received data by performing certain steps.

[0132] In an embodiment, analyzer module **208** performs some of the steps for determining the sound pressure and provides one or more outputs to the user (e.g., resonance frequency shift of optical cavity **203**), from which the user can readily calculate the sound pressure, the sound pressure thereby being obtained in a primary manner.

[0133] In an embodiment, analyzer module **208** includes separate component modules that communicate with each other by removable media, on-screen values that are manually read from some components and entered into others, analog electrical connections, digital electrical connections, wireless connections, optical ethernet connections, and the like.

[0134] Sound pressure metrology instrument **200** and processes disclosed herein have numerous beneficial uses since it measures the sound pressure directly and does not require the use of reciprocal microphones being to achieve a primary sound calibration or measurement. Further, sound pressure metrology instrument **200** can provide increased accuracy and primary calibration over a wider range of sound frequencies compared to conventional methods. Sound pressure metrology instrument **200** measures sound pressure that is superior to conventional methods in that sound pressure metrology instrument **200** directly realizes the sound pressure and is applicable to direct primary sound measurements and to calibration of a wide variety of sound sources and sensors, can be more accurate than conventional methods, and can be applicable to a wider range of sound frequencies than conventional methods while providing traceability of sound pressure to quantum standards.

[0135] Sound pressure metrology instrument **200** can be a primary sound standard for calibrating a variety of acoustic instruments and can have different shapes and sizes, depending on the instruments and frequency ranges that are measured. Sound pressure metrology instrument **200** can be a refractive-index-based traceable microphone that performs accurate sound measurements without requiring calibration because sound pressure metrology instrument **200** is intrinsically traceable. Furthermore, sound pressure metrology instrument **200** can calibrate other devices in a variety of acoustic field configurations.

[0136] The sound pressure metrology instrument **200** can be used in a variety of applications. For example, the sound pressure metrology instrument **200** can be used to measure the sound pressure level of a variety of acoustic sources, such as loudspeakers, musical instruments, and machinery. The sound pressure metrology instrument **200**may also be used to measure the sound pressure level of environmental noise, such as traffic noise, construction noise, and industrial noise. The sound pressure metrology instrument **200** may also be used to calibrate microphones.

[0137] The articles and processes herein are illustrated further by the following Example, which is non-limiting.

EXAMPLE

[0138] This example describes low-uncertainty sound measurement using pressure-driven oscillation of the refractive index of air inside a combined acoustical and optical cavity. Here, primary sound measurement involves the pressure-driven oscillation of the refractive index at the acoustic frequency in an optical cavity and provides low uncertainty over a wide range of acoustic frequencies.

[0139] For implementation of a primary sound standard, generate steady single-frequency sound fields in an acoustic resonator or in an acoustic coupler. Sound is generated at one end by a source, and a microphone to be calibrated is mounted in the opposite end. In the resonator, standing plane waves are generated at integer multiples of the frequency for which the resonator end-to-end length is equal to the acoustic wavelength. For even multiples, the midplane location of the optical cavity results in the optical cavity seeing the same pressure amplitude as occurs at the ends of the resonator. For a Fabry-Perot cavity of length l containing a gas with refractive index n, the sensitivity of the cavity resonance frequency v_r to pressure p is

$$\frac{\partial y}{\partial x} = -v_r\left(\frac{1}{n}\frac{\partial n}{\partial p} + \frac{1}{l}\frac{\partial l}{\partial p}\right). \quad (1)$$

At a wavelength of 1550 nm and standard atmospheric conditions, the sensitivity of the refractive index to pressure is typically

$$\frac{1}{n}\left(\frac{\partial n}{\partial p}\right)_A = 1.9\times10^{-9}\ \mathrm{Pa}^{-1}.$$

For 1550 nm light (v_r=1.94×10^{14} Hz), a sound pressure amplitude of a few Pascals results in a cavity resonance frequency shift amplitude of a few megahertz. Such a frequency shift is measurable to high resolution using a narrow-linewidth optical cavity. The acoustic pressure can cause the cavity frequency to change via the effect of the pressure on the cavity length l, given the finite mechanical impedance of the cavity structure. This causes a small error that can be minimized by mechanical design and largely compensated for by modeling. The cavity frequency shift can be read out using a lock-based readout in which the Pound-Drever-Hall method is used to servo the laser frequency to the cavity resonance frequency. In this example, an acousto-optic frequency shifter is used. A high-repetition rate frequency counter tracks the frequency shift in time. The laser output is stabilized at the acoustic frequency prior to injection into the cavity lock.

[0140] The processes described herein can be embodied in, and fully automated via, software code modules executed by a computing system that includes one or more general purpose computers or processors. The code modules can be stored in any type of non-transitory computer-readable medium or other computer storage device. Some or all of the

methods may alternatively be embodied in specialized computer hardware. In addition, the processes referred to herein can be implemented in hardware, software, firmware, or a combination thereof.

[0141] Many other variations than those described herein can be apparent from this disclosure. For example, depending on the embodiment, certain acts, events, or functions of any of the algorithms described herein can be performed in a different sequence, can be added, merged, or left out altogether (e.g., not all described acts or events are necessary for the practice of the algorithms). Moreover, in certain embodiments, acts or events can be performed concurrently, e.g., through multi-threaded processing, interrupt processing, or multiple processors or processor cores or on other parallel architectures, rather than sequentially. In addition, different tasks or processes can be performed by different machines and/or computing systems that can function together.

[0142] Any processes and algorithm elements described or used in connection with the embodiments disclosed herein can be implemented as electronic hardware, computer software, firmware, or combinations thereof. To clearly illustrate this interchangeability of hardware and software, various illustrative components, blocks, modules, and elements have been described above generally in terms of their functionality. Whether such functionality is implemented as hardware or software depends upon the particular application and design constraints imposed on the overall system. The described functionality can be implemented in varying ways for each particular application, but such implementation decisions should not be interpreted as causing a departure from the scope of the disclosure.

[0143] The various illustrative logical blocks and modules described or used in connection with the embodiments disclosed herein can be implemented or performed by a machine, such as a processing unit or processor, a digital signal processor (DSP), an application specific integrated circuit (ASIC), a field programmable gate array (FPGA) or other programmable logic device, discrete gate or transistor logic, discrete hardware components, or any combination thereof designed to perform the functions described herein. A processor can be a microprocessor, but in the alternative, the processor can be a controller, microcontroller, or state machine, combinations of the same, or the like. A processor can include electrical circuitry configured to process computer-executable instructions. In another embodiment, a processor includes an FPGA or other programmable device that performs logic operations without processing computer-executable instructions. A processor can also be implemented as a combination of computing devices, e.g., a combination of a DSP and a microprocessor, a plurality of microprocessors, one or more microprocessors in conjunction with a DSP core, or any other such configuration. Although described herein primarily with respect to digital technology, a processor may also include primarily analog components. For example, some or all of the signal processing algorithms described herein can be implemented in analog circuitry or mixed analog and digital circuitry. A computing environment can include any type of computer system, including, but not limited to, a computer system based on a microprocessor, a mainframe computer, a digital signal processor, a portable computing device, a device controller, or a computational engine within an appliance, to name a few.

[0144] The elements of a method, process, or algorithm described in connection with the embodiments disclosed herein can be embodied directly in hardware, in a software module stored in one or more memory devices and executed by one or more processors, or in a combination of the two. A software module can reside in RAM memory, flash memory, ROM memory, EPROM memory, EEPROM memory, registers, hard disk, a removable disk, a CD-ROM, or any other form of non-transitory computer-readable storage medium, media, or physical computer storage known in the art. An example storage medium can be coupled to the processor such that the processor can read information from, and write information to, the storage medium. In the alternative, the storage medium can be integral to the processor. The storage medium can be volatile or nonvolatile.

[0145] While one or more embodiments have been shown and described, modifications and substitutions can be made thereto without departing from the spirit and scope of the invention. Accordingly, it is to be understood that the present invention has been described by way of illustrations and not limitation. Embodiments herein can be used independently or can be combined.

[0146] All ranges disclosed herein are inclusive of the endpoints, and the endpoints are independently combinable with each other. The ranges are continuous and thus contain every value and subset thereof in the range. Unless otherwise stated or contextually inapplicable, all percentages, when expressing a quantity, are weight percentages. The suffix (s) as used herein is intended to include both the singular and the plural of the term that it modifies, thereby including at least one of that term (e.g., the mode(s) includes at least one modes). Option, optional, or optionally means that the subsequently described event or circumstance can or cannot occur, and that the description includes instances where the event occurs and instances where it does not. As used herein, combination is inclusive of assemblages, collection of elements, blends, mixtures, alloys, and the like.

[0147] As used herein, a combination thereof refers to a combination comprising at least one of the named constituents, components, compounds, or elements, optionally together with one or more of the same class of constituents, components, compounds, or elements.

[0148] All references are incorporated herein by reference.

[0149] The use of the terms "a," "an," and "the" and similar referents in the context of describing the invention (especially in the context of the following claims) are to be construed to cover both the singular and the plural, unless otherwise indicated herein or clearly contradicted by context. It can further be noted that the terms first, second, primary, secondary, and the like herein do not denote any order, quantity, or importance, but rather are used to distinguish one element from another. It can also be understood that, although the terms first, second, etc. are, in some instances, used herein to describe various elements, these elements should not be limited by these terms. For example, a first current could be termed a second current, and, similarly, a second current could be termed a first current, without departing from the scope of the various described embodiments. The first current and the second current are both currents, but they are not the same condition unless explicitly stated as such.

[0150] The modifier about used in connection with a quantity is inclusive of the stated value and has the meaning dictated by the context (e.g., it includes the degree of error

associated with measurement of the particular quantity). The modifier nearly used in connection with a quantity is inclusive of the stated value and has the meaning that the deviation from the stated value is small in magnitude compared to the stated value. The conjunction or is used to link objects of a list or alternatives and is not disjunctive; rather the elements can be used separately or can be combined together under appropriate circumstances.

What is claimed is:

1. A sound pressure metrology instrument for determining sound pressure from index of refraction, the sound pressure metrology instrument comprising:

a light source that produces source light and communicates the source light to an optical cavity;

the optical cavity in optical communication with the light source, in acoustic communication with a sound source, and in optical communication a photodetector, such that an acoustic medium is disposed within an optical mode volume of the optical cavity and such that optical cavity:

receives an acoustic field from the sound source;

receives the source light from the light source;

produces acoustic-modified light from the source light in response to the source light interacting with the acoustic field in the optical cavity, such that the acoustic-modified light encodes modulations in the index of refraction of the acoustic medium inside the optical cavity due to the acoustic field; and

optically communicates the acoustic-modified light to the photodetector;

the photodetector in optical communication with the optical cavity and in electrical communication with an analyzer module and that receives the acoustic-modified light from the optical cavity, produces an acoustic-modified signal from the acoustic-modified light, and communicates the acoustic-modified signal to the analyzer module;

the analyzer module in electrical communication with the photodetector and that receives the acoustic-modified signal from the photodetector and determines the sound pressure of the acoustic field produced by the sound source from the modulations in the index of refraction of the acoustic medium inside the optical cavity encoded in the acoustic-modified light.

2. The sound pressure metrology instrument of claim **1**, further comprising a supplemental sensor in communication with the analyzer module and that produces supplemental sensor signal and communicates the supplemental sensor signal to the analyzer module.

3. The sound pressure metrology instrument of claim **2**, wherein the supplemental sensor comprises a temperature sensor, humidity sensor, pressure sensor, mass spectrometer, chromatograph, wavemeter, a carbon dioxide concentration sensor, an accelerometer, a laser vibrometer, or a displacement sensor that measures a temperature, humidity, static background pressure, or composition of the acoustic medium in the optical cavity or optical frequency or wavelength of the source light or the acoustic-modified light.

4. The sound pressure metrology instrument of claim **2**, wherein the supplemental sensor:

measures a temperature, humidity, static background pressure, or composition of the acoustic medium in the optical cavity or optical frequency or wavelength of the source light or the acoustic-modified light, and

communicates the temperature, humidity, static background pressure, or composition of the acoustic medium in the optical cavity or optical frequency or wavelength of the source light or the acoustic-modified light as the supplemental sensor signal to the analyzer module.

5. The sound pressure metrology instrument of claim **2**, wherein the analyzer module receives the supplemental sensor signal from the supplemental sensor, and the analyzer module uses the supplemental sensor signal to improve the fidelity of the determination of the sound pressure.

6. The sound pressure metrology instrument of claim **1**, wherein the analyzer module determines the sound pressure from the index of refraction based on

$$\Delta p = \Delta n \left(\frac{dn}{dp}\right)_X^{-1}$$

wherein X is a condition on the derivative and is adiabatic, isothermal, or polytropic; n is index of refraction of acoustic medium; and p is sound pressure.

7. The sound pressure metrology instrument of claim **1**, further comprising the sound source.

8. The sound pressure metrology instrument of claim **7**, further comprising an acoustic enclosure in which is disposed the optical cavity and the optical cavity, the acoustic medium, the sound source, and the acoustic field.

9. The sound pressure metrology instrument of claim **8**, wherein the acoustic enclosure comprises an acoustic resonator, wherein the acoustic enclosure supports a standing acoustic wave at an acoustic wavelength λ_{ac}=L/N, wherein N is an integer, and L is a distance of separation of the sound source and the microphone that are disposed on opposing ends of the acoustic enclosure.

10. The sound pressure metrology instrument of claim **8**, wherein the acoustic enclosure comprises an acoustic coupler, wherein the acoustic field has constant acoustic pressure in the acoustic enclosure such that λ_{ac}<<L/N, wherein N is an integer, and L is a distance of separation of the sound source and the microphone that are disposed on opposing ends of the acoustic enclosure.

11. The sound pressure metrology instrument of claim **1**, further comprising a sound source driver in electrical communication with the sound source and that provides a driver signal, communicates the driver signal to the sound source, and controls production of the acoustic field by the sound source with the driver signal.

12. The sound pressure metrology instrument of claim **1**, further comprising a microphone in acoustic communication with the sound source such that the optical cavity is acoustically interposed between the sound source and the microphone, such that the microphone receives the acoustic field that propagates through the optical cavity from the sound source, produces a microphone signal from the acoustic field, and communicates the microphone signal to a microphone receiver.

13. The sound pressure metrology instrument of claim **12**, further comprising a microphone receiver in electrical communication with the microphone and that receives the microphone signal from the microphone, produces an acoustic signal from the microphone signal, and communicates the acoustic signal to the analyzer module, such that the sound pressure measured by the analyzer module is compared with

the microphone signal from the microphone to calibrate the sensitivity of the microphone.

14. A process for determining sound pressure from index of refraction, the process comprising:

receiving, by an optical cavity comprising an acoustic medium disposed within an optical mode volume of the optical cavity, an acoustic field from a sound source;

receiving, by the optical cavity, source light from a light source;

interacting source light with the acoustic field in the optical cavity;

producing an acoustic-modified light from the source light in response to interacting with the acoustic field, such that the acoustic-modified light encodes modulations in the index of refraction of the acoustic medium inside the optical cavity due to the acoustic field;

communicating the acoustic-modified light signal to a photodetector;

receiving the acoustic-modified light by the photodetector;

producing, by the photodetector, an acoustic-modified signal from the acoustic-modified light;

communicating the acoustic-modified signal from the photodetector to an analyzer module; and

determining, by the analyzer module, the sound pressure of the acoustic field from the modulations in the index of refraction of the acoustic medium encoded inside the optical cavity in the acoustic-modified light.

15. The process of claim **14**, further comprising:

receiving a supplemental sensor signal from a supplemental sensor;

using the supplemental sensor signal to improve the fidelity of the determination of the sound pressure level.

16. The process of claim **14**, wherein the analyzer module determines the sound pressure level from the index of refraction based on the following equation:

$$\Delta p = \Delta n \left(\frac{dn}{dp} \right)_X^{-1}$$

wherein X is a condition on the derivative and is adiabatic, isothermal, or polytropic; n is index of refraction of acoustic medium; and p is sound pressure.

17. The process of claim **14**, further comprising:

controlling production of the acoustic field by the sound source by a sound source driver.

18. The process of claim **1**, further comprising:

reciving the acoustic field by a microphone and producing a microphone signal from the acoustic field.

19. The process of claim **18**, further comprising:

receving the microphone signal by a microphone receiver and producing an acoustic signal from the microphone signal.

20. The process of claim **18**, further comprising:

communicating the acoustic signal to the analyzer module from the microphone receiver; and

comparing, by the analyzer module, the sound pressure level measured by the analyzer module with the microphone signal from the microphone to calibrate the sensitivity of the microphone.

* * * * *